# Ecological site R066XY047NE
# Saline Subirrigated

Accessed: 04/27/2024

## General information

**Approved**. An approved ecological site description has undergone quality control and quality assurance review. It contains a working state and transition model, enough information to identify the ecological site, and full documentation for all ecosystem states contained in the state and transition model.


**Figure 1. Mapped extent**

Areas shown in blue indicate the maximum mapped extent of this ecological site. Other ecological sites likely occur within the highlighted areas. It is also possible for this ecological site to occur outside of highlighted areas if detailed soil survey has not been completed or recently updated.

## Classification relationships

Level IV Ecoregions of the Conterminous United States: 43i – Keya Paha Tablelands.

## Associated sites

| | |
|---|---|
| R066XY032NE | **Sandy 18-22" P.Z.** |
| R066XY033NE | **Sands 18-22 P.Z.** |
| R066XY044NE | **Wet Land** |
| R066XY045NE | **Wet Subirrigated (obsolete, absorbed by sub/wetland)** |
| R066XY054NE | **Sandy 22-25 P.Z.** |
| R066XY055NE | **Sands 22-25 P.Z.** |

## Similar sites

| | |
|---|---|
| R066XY046NE | **Subirrigated**<br>Subirrigated - [big bluestem, Indiangrass dominant; less prairie cordgrass; more productive] |

**Table 1. Dominant plant species**

| | |
|---|---|
| Tree | Not specified |
| Shrub | Not specified |
| Herbaceous | (1) *Sporobolus airoides*<br>(2) *Pascopyrum smithii* |

## Physiographic features

**Table 2. Representative physiographic features**

| | |
|---|---|
| Landforms | (1) Alluvial flat |
| Flooding duration | Brief (2 to 7 days) |
| Flooding frequency | Occasional |
| Elevation | 1,900–3,000 ft |
| Slope | 0–2% |
| Ponding depth | 0 in |
| Water table depth | 18–36 in |
| Aspect | Aspect is not a significant factor |

## Climatic features

MLRA 66 is considered to have a continental climate – cold winters and hot summers, low humidity, light rainfall, and much sunshine. Extremes in temperature may also abound. The climate is the result of this MLRA's location near the geographic center of North America. There are few natural barriers on the northern Great Plains and the winds move freely across the plains and account for rapid changes in temperature.

Annual precipitation ranges from 18 to 25 inches per year. The normal average annual temperature is about 48° F. January is the coldest month with average temperatures ranging from about 19° F (Bonesteel, SD) to about 23° F (Ainsworth, NE). July is the warmest month with temperatures averaging from about 73° F (Harrington, SD) to about 75° F (Gregory, SD). The range of normal average monthly temperatures between the coldest and warmest months is about 54° F. This large annual range attests to the continental nature of this area's climate. Hourly winds average about 10 miles per hour annually, ranging from about 11 miles per hour during the spring to about 9 miles per hour during the summer. Daytime winds are generally stronger than nighttime and occasional strong storms may bring brief periods of high winds with gusts to more than 50 miles per hour.

Growth of native cool season plants begins mid to late March and continues to late June. Native warm season plants begin growth in early May and continue to late August. Green up of cool season plants may occur in September and October when adequate soil moisture is present.

**Table 3. Representative climatic features**

| | |
|---|---|
| Frost-free period (average) | 154 days |
| Freeze-free period (average) | 173 days |
| Precipitation total (average) | 25 in |

## Influencing water features

This ecological site has a combination of physical and hydrological features that: 1) provide season-long ground water within 3.5 feet of the surface, 2) allows relatively free movement of water and air in the upper part of the soil, and 3) are rarely, or occasionally flooded.

## Soil features

The features common to all soils in this site are the fine sand and loamy fine sand textured surface soils and slopes of 0 to 2 percent. The soils in this site are somewhat poorly drained and formed in eolian sand and/or sandy alluvium. The surface layer is 0.5 to 10 inches thick. The texture of the subsurface ranges from loamy fine sand to sand. Finer textured layers may occur in the lower parts of some profiles. Runoff as evidenced by patterns of rills, gullies or other water flow is negligible due to the low slope gradient and high intake rate of these soils. Some pedestalling of plants occurs, but it is not very evident on casual observation and occurs on less than 5% of the plants.

Access Web Soil Survey (http://websoilsurvey.nrcs.usda.gov/app/) for specific local soils information.

**Table 4. Representative soil features**

| | |
|---|---|
| Surface texture | (1) Fine sand<br>(2) Loamy fine sand<br>(3) Sand |
| Family particle size | (1) Sandy |
| Drainage class | Somewhat poorly drained to moderately well drained |
| Permeability class | Moderately slow to rapid |
| Soil depth | 80 in |
| Surface fragment cover <=3" | 0% |
| Surface fragment cover >3" | 0% |
| Available water capacity (0-40in) | 3–6 in |
| Calcium carbonate equivalent (0-40in) | 0–15% |
| Electrical conductivity (0-40in) | 0–20 mmhos/cm |
| Sodium adsorption ratio (0-40in) | 6–105 |
| Soil reaction (1:1 water) (0-40in) | 8.5–9.9 |
| Subsurface fragment volume <=3" (Depth not specified) | 0–5% |
| Subsurface fragment volume >3" (Depth not specified) | 0% |

## Ecological dynamics

As this site deteriorates, species such as inland saltgrass and foxtail barley increase. Grasses such as alkali sacaton, alkali cordgrass, western wheatgrass and slender wheatgrass will decrease in frequency and production. Interpretations are primarily based on the Alkali Sacaton Plant Community. It has been determined by study of rangeland relic areas, areas protected from excessive disturbance, and areas under long-term rotational grazing regimes. Trends in plant community dynamics ranging from heavily grazed to lightly grazed areas, seasonal use pastures, and historical accounts also have been used. Subclimax plant communities, states, transitional pathways, and thresholds have been determined through similar studies and experience.
The following is a diagram that illustrates the common plant communities that can occur on the site and the transition pathways between communities. The ecological processes will be discussed in more detail in the plant community descriptions following the diagram.

## State and transition model

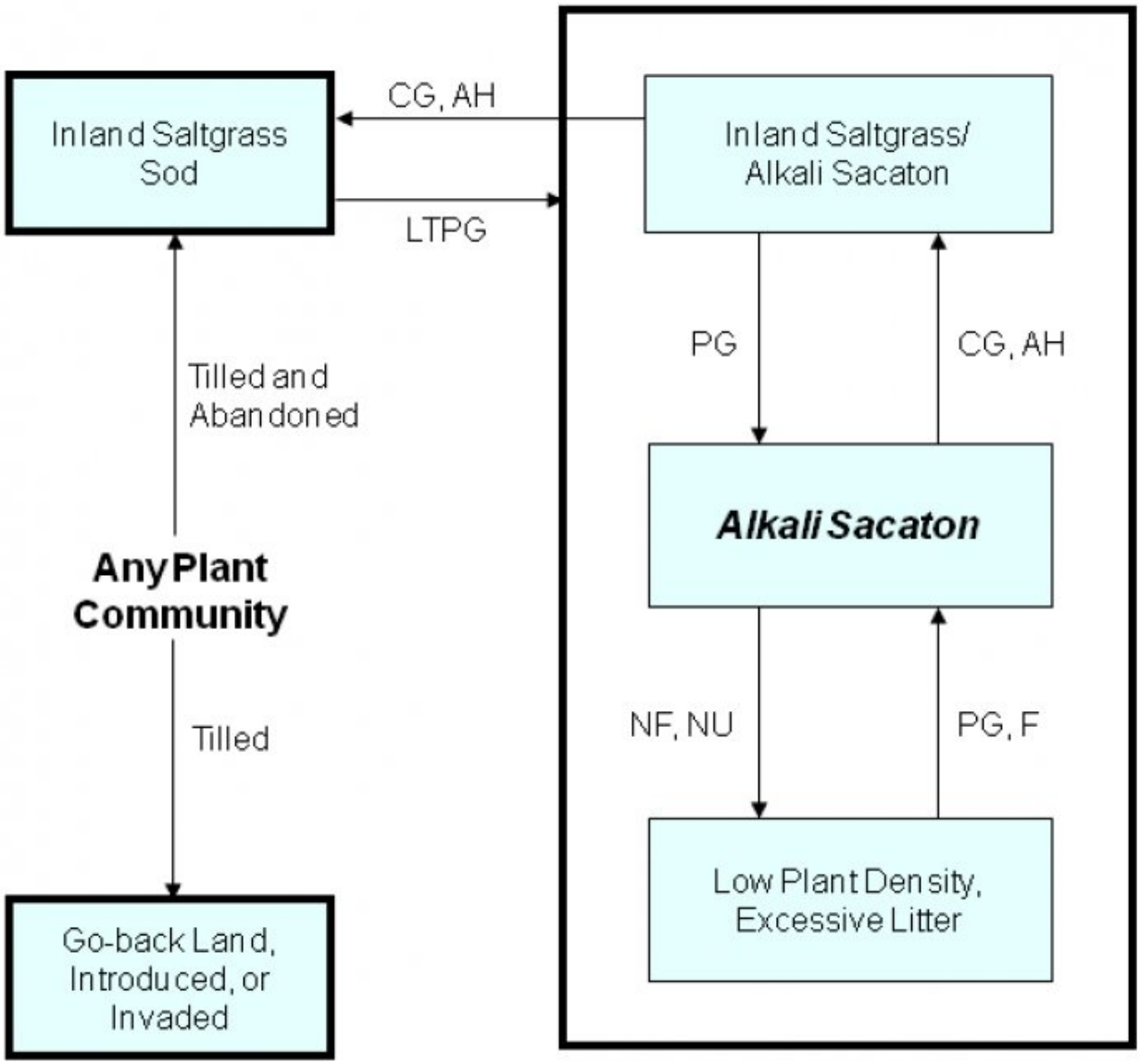


**AH** – Annual haying; **CG** – Continuous grazing without adequate recovery periods; **F** – Fire; **LTPG** – Long-term prescribed grazing (> 40 years); **NF** – No fire; **NU** – Non-use; **PG** – Prescribed grazing with adequate recovery periods.

### State 1
### Reference State

This state is dominated by native warm- and cool-season grasses.

### Community 1.1
### Alkali Sacaton

Interpretations are primarily based on the Alkali Sacaton Plant Community (this is also considered climax). This site developed with grazing by large herbivores and is well suited for grazing by domestic livestock. This plant community can be found on areas that are properly managed with grazing and/or prescribed burning, and sometimes on areas receiving occasional short periods of rest. This plant community consists mainly of mid warm and cool season grasses. The principle dominant plants are alkali sacaton, inland saltgrass and western wheatgrass. Grasses of secondary importance are alkali cordgrass, slender wheatgrass, little bluestem and foxtail

barley. Blue grasses, sedges and spike rushes occur as an understory. Forbs such as heath aster, milkvetch and prairie gentian are significant. This plant community is about 80% grasses, 15% grass-likes and 5% forbs by air-dry weight. This plant community is adapted to high salt content inherent of the soils. White crusts can occupy many areas of the soil surface due to seasonal fluctuations in the water table. This is a healthy and sustainable plant community in terms of soil stability, watershed function and biological integrity.

**Table 5. Annual production by plant type**

| Plant Type | Low (Lb/Acre) | Representative Value (Lb/Acre) | High (Lb/Acre) |
|---|---|---|---|
| Grass/Grasslike | 2100 | 2730 | 3355 |
| Forb | 0 | 70 | 145 |
| **Total** | **2100** | **2800** | **3500** |

**Figure 5. Plant community growth curve (percent production by month). NE6642, Eroded Tableland, warm-season dominant, cool-season subdominant.**

| Jan | Feb | Mar | Apr | May | Jun | Jul | Aug | Sep | Oct | Nov | Dec |
|---|---|---|---|---|---|---|---|---|---|---|---|
| | | 3 | 8 | 18 | 27 | 23 | 12 | 6 | 3 | | |

## Community 1.2
## Inland Saltgrass/Alkali Sacaton

This plant community developed with relatively short term continuous grazing without periodic rest, or with annual haying. Plants resistant to removal are maintaining vigor. The potential vegetation is about 80% grasses, 15% grass-like plants, and 5% forbs. Inland saltgrass and alkali sacaton have increased in abundance. Most of the palatable plants such as western wheatgrass, slender wheatgrass, and alkali cordgrass are present but occur in lesser amounts. The soil is stable; however, plant diversity has been reduced. The water cycle, nutrient cycle and energy flow are slightly reduced but continue to adequately function. This community indicates key management concerns. Proper grazing management techniques at this point will stabilize the community at or near the Alkali Sacaton Plant Community. Increased disturbance can easily move the community to a more degraded scenario.

**Table 6. Annual production by plant type**

| Plant Type | Low (Lb/Acre) | Representative Value (Lb/Acre) | High (Lb/Acre) |
|---|---|---|---|
| Grass/Grasslike | 1300 | 1658 | 2010 |
| Forb | 0 | 42 | 90 |
| **Total** | **1300** | **1700** | **2100** |

**Figure 7. Plant community growth curve (percent production by month). NE6642, Eroded Tableland, warm-season dominant, cool-season subdominant.**

| Jan | Feb | Mar | Apr | May | Jun | Jul | Aug | Sep | Oct | Nov | Dec |
|---|---|---|---|---|---|---|---|---|---|---|---|
| | | 3 | 8 | 18 | 27 | 23 | 12 | 6 | 3 | | |

## Community 1.3
## Low Plant Density, Excessive Litter

This plant community occurs after an extended period of non-use by domestic livestock. Fire is uncommon or has been eliminated. Litter amounts have increased causing plant density to decrease. Typically, bunchgrasses (alkali sacaton) have developed dead centers and rhizomatous grasses (inland saltgrass) form small colonies because of a lack of tiller stimulation. Salt crusts and/or annual plant species such as kochia and Russian thistle commonly fill bare ground areas. Plant frequency and production have decreased. The potential vegetation is about 75% grasses, 20% grass-like plants, and 5% forbs. Soil erosion is not a concern due to increased litter levels and landscape position.

**Table 7. Annual production by plant type**

| Plant Type | Low (Lb/Acre) | Representative Value (Lb/Acre) | High (Lb/Acre) |
|---|---|---|---|
| Grass/Grasslike | 1400 | 1853 | 2300 |
| Forb | 0 | 47 | 100 |
| **Total** | **1400** | **1900** | **2400** |

**Figure 9. Plant community growth curve (percent production by month). NE6642, Eroded Tableland, warm-season dominant, cool-season subdominant.**

| Jan | Feb | Mar | Apr | May | Jun | Jul | Aug | Sep | Oct | Nov | Dec |
|---|---|---|---|---|---|---|---|---|---|---|---|
| | | 3 | 8 | 18 | 27 | 23 | 12 | 6 | 3 | | |

## Pathway 1.1a
## Community 1.1 to 1.2

Continuous grazing without adequate recovery periods following grazing events or annual haying will convert this plant community to the Inland Saltgrass/Alkali Sacaton Plant Community.

## Pathway 1.1b
## Community 1.1 to 1.3

Non-use and no fire will convert this plant community to the Low Plant Density, Excessive Litter Plant Community.

## Pathway 1.2a
## Community 1.2 to 1.1

Prescribed grazing with adequate recovery opportunity will restore this community back to the Alkali Sacaton Plant Community.

### Conservation practices

| |
|---|
| Prescribed Grazing |

## Pathway 1.3a
## Community 1.3 to 1.1

Prescribed grazing or fire with adequate recovery opportunity or prescribed burning will shift this plant community towards the Alkali Sacaton Plant Community.

### Conservation practices

| |
|---|
| Prescribed Burning |
| Prescribed Grazing |

## State 2
## Inland Saltgrass Sod

This state is dominated by short warm-season grasses and is a result of continuous heavy grazing or annual haying, especially if hayed too close.

## Community 2.1
## Inland Saltgrass Sod

This plant community developed with further continuous grazing or areas that have been tilled and abandoned. Inland saltgrass dominates this plant community and has developed into a sod bound condition. Alkali sacaton has been greatly reduced. Slender and western wheatgrass are gone and have been replaced by increased amounts of foxtail barley. Plains pricklypear has increased. Forbs such as kochia and Russian thistle have also increased. The potential vegetation is about 80% grasses, 15% grass-like plants, and 5% forbs. The plant community lacks diversity. Evaporation has increased resulting in a higher salt content on the soil surface. Organic matter/carbon reserves are severely diminished. It will take a long time to bring this plant community back to the Alkali Sacaton Plant Community with management alone. Renovation of this plant community would be very costly due to high salt content and water table.

**Table 8. Annual production by plant type**

| Plant Type | Low (Lb/Acre) | Representative Value (Lb/Acre) | High (Lb/Acre) |
|---|---|---|---|
| Grass/Grasslike | 800 | 975 | 1145 |
| Forb | 0 | 25 | 55 |
| **Total** | **800** | **1000** | **1200** |

**Figure 11. Plant community growth curve (percent production by month). NE6642, Eroded Tableland, warm-season dominant, cool-season subdominant.**

| Jan | Feb | Mar | Apr | May | Jun | Jul | Aug | Sep | Oct | Nov | Dec |
|---|---|---|---|---|---|---|---|---|---|---|---|
| | | 3 | 8 | 18 | 27 | 23 | 12 | 6 | 3 | | |

## Transition 1
## State 1 to 2

Continuous grazing or annual haying with no recovery opportunity shifts this plant community to the Inland Saltgrass Sod Plant Community.

## Additional community tables

**Table 9. Community 1.1 plant community composition**

| Group | Common Name | Symbol | Scientific Name | Annual Production (Lb/Acre) | Foliar Cover (%) |
|---|---|---|---|---|---|
| **Grass/Grasslike** | | | | | |
| 1 | **Sacaton** | | | 560–1120 | |
| | alkali sacaton | SPAI | *Sporobolus airoides* | 560–1120 | – |
| 2 | **Saltgrass** | | | 280–560 | |
| | saltgrass | DISP | *Distichlis spicata* | 280–560 | – |
| 3 | **Wheatgrass** | | | 280–560 | |
| | western wheatgrass | PASM | *Pascopyrum smithii* | 280–560 | – |
| 4 | **Warm-Season Grasses** | | | 140–700 | |
| | switchgrass | PAVI2 | *Panicum virgatum* | 0–420 | – |
| | sand dropseed | SPCR | *Sporobolus cryptandrus* | 0–280 | – |
| | alkali cordgrass | SPGR | *Spartina gracilis* | 0–280 | – |
| | little bluestem | SCSC | *Schizachyrium scoparium* | 0–140 | – |
| | blue grama | BOGR2 | *Bouteloua gracilis* | 0–140 | – |
| | scratchgrass | MUAS | *Muhlenbergia asperifolia* | 0–140 | – |
| 5 | **Other Native Grasses** | | | 280–560 | |
| | slender wheatgrass | ELTR7 | *Elymus trachycaulus* | 140–280 | – |
| | plains bluegrass | POAR3 | *Poa arida* | 140–280 | – |
| | foxtail barley | HOJU | *Hordeum jubatum* | 0–140 | – |
| | Graminoid (grass or grass-like) | 2GRAM | *Graminoid (grass or grass-like)* | 0–140 | – |
| 7 | **Grass-likes** | | | 140–420 | |
| | sedge | CAREX | *Carex* | 0–280 | – |
| | spikerush | ELEOC | *Eleocharis* | 0–140 | – |
| | mountain rush | JUARL | *Juncus arcticus ssp. littoralis* | 0–140 | – |
| | rush | JUNCU | *Juncus* | 0–140 | – |
| | bulrush | SCHOE6 | *Schoenoplectus* | 0–140 | – |
| | Grass-like (not a true grass) | 2GL | *Grass-like (not a true grass)* | 0–140 | – |
| **Forb** | | | | | |
| 8 | **Forbs** | | | 0–140 | |
| | Forb, native | 2FN | *Forb, native* | 0–56 | – |
| | Cuman ragweed | AMPS | *Ambrosia psilostachya* | 0–28 | – |
| | white sagebrush | ARLU | *Artemisia ludoviciana* | 0–28 | – |
| | milkvetch | ASTRA | *Astragalus* | 0–28 | – |
| | scouringrush horsetail | EQHY | *Equisetum hyemale* | 0–28 | – |
| | showy prairie gentian | EUEXR | *Eustoma exaltatum ssp. russellianum* | 0–28 | – |
| | Pursh seepweed | SUCA2 | *Suaeda calceoliformis* | 0–28 | – |
| | white heath aster | SYER | *Symphyotrichum ericoides* | 0–28 | – |
| | marsh arrowgrass | TRPA28 | *Triglochin palustris* | 0–28 | – |

**Table 10. Community 1.2 plant community composition**

| Group | Common Name | Symbol | Scientific Name | Annual Production (Lb/Acre) | Foliar Cover (%) |
|---|---|---|---|---|---|
| **Grass/Grasslike** | | | | | |
| 1 | **Sacaton** | | | 340–680 | |
| | alkali sacaton | SPAI | *Sporobolus airoides* | 340–680 | – |
| 2 | **Saltgrass** | | | 510–680 | |
| | saltgrass | DISP | *Distichlis spicata* | 510–680 | – |
| 3 | **Wheatgrass** | | | 0–85 | |
| | western wheatgrass | PASM | *Pascopyrum smithii* | 0–85 | – |
| 4 | **Warm-Season Grasses** | | | 34–170 | |
| | scratchgrass | MUAS | *Muhlenbergia asperifolia* | 0–85 | – |
| | sand dropseed | SPCR | *Sporobolus cryptandrus* | 0–85 | – |
| | alkali cordgrass | SPGR | *Spartina gracilis* | 0–85 | – |
| | switchgrass | PAVI2 | *Panicum virgatum* | 0–34 | – |
| | little bluestem | SCSC | *Schizachyrium scoparium* | 0–34 | – |
| | blue grama | BOGR2 | *Bouteloua gracilis* | 0–34 | – |
| 5 | **Other Native Grasses** | | | 85–255 | |
| | foxtail barley | HOJU | *Hordeum jubatum* | 85–170 | – |
| | plains bluegrass | POAR3 | *Poa arida* | 0–85 | – |
| | slender wheatgrass | ELTR7 | *Elymus trachycaulus* | 0–85 | – |
| | Graminoid (grass or grass-like) | 2GRAM | *Graminoid (grass or grass-like)* | 0–34 | – |
| 6 | **Non-Native Grasses** | | | 0–85 | |
| | Kentucky bluegrass | POPR | *Poa pratensis* | 0–85 | – |
| 7 | **Grass-likes** | | | 85–255 | |
| | sedge | CAREX | *Carex* | 0–170 | – |
| | spikerush | ELEOC | *Eleocharis* | 0–85 | – |
| | mountain rush | JUARL | *Juncus arcticus ssp. littoralis* | 0–85 | – |
| | rush | JUNCU | *Juncus* | 0–85 | – |
| | bulrush | SCHOE6 | *Schoenoplectus* | 0–85 | – |
| | Grass-like (not a true grass) | 2GL | *Grass-like (not a true grass)* | 0–85 | – |
| **Forb** | | | | | |
| 8 | **Forbs** | | | 0–85 | |
| | Forb, introduced | 2FI | *Forb, introduced* | 0–34 | – |
| | Forb, native | 2FN | *Forb, native* | 0–34 | – |
| | Cuman ragweed | AMPS | *Ambrosia psilostachya* | 0–34 | – |
| | white sagebrush | ARLU | *Artemisia ludoviciana* | 0–34 | – |
| | milkvetch | ASTRA | *Astragalus* | 0–17 | – |
| | scouringrush horsetail | EQHY | *Equisetum hyemale* | 0–17 | – |
| | showy prairie gentian | EUEXR | *Eustoma exaltatum ssp. russellianum* | 0–17 | – |
| | white heath aster | SYER | *Symphyotrichum ericoides* | 0–17 | – |
| | common dandelion | TAOF | *Taraxacum officinale* | 0–17 | – |
| | marsh arrowgrass | TRPA28 | *Triglochin palustris* | 0–17 | – |

**Table 11. Community 1.3 plant community composition**

| Group | Common Name | Symbol | Scientific Name | Annual Production (Lb/Acre) | Foliar Cover (%) |
|---|---|---|---|---|---|
| **Grass/Grasslike** | | | | | |
| 1 | **Sacaton** | | | 285–570 | |
| | alkali sacaton | SPAI | *Sporobolus airoides* | 285–570 | – |
| 2 | **Saltgrass** | | | 285–570 | |
| | saltgrass | DISP | *Distichlis spicata* | 285–570 | – |
| 3 | **Wheatgrass** | | | 190–380 | |
| | western wheatgrass | PASM | *Pascopyrum smithii* | 190–380 | – |
| 4 | **Warm-Season Grasses** | | | 190–475 | |
| | switchgrass | PAVI2 | *Panicum virgatum* | 95–285 | – |
| | little bluestem | SCSC | *Schizachyrium scoparium* | 95–190 | – |
| | sand dropseed | SPCR | *Sporobolus cryptandrus* | 0–95 | – |
| | alkali cordgrass | SPGR | *Spartina gracilis* | 0–95 | – |
| | scratchgrass | MUAS | *Muhlenbergia asperifolia* | 0–95 | – |
| | blue grama | BOGR2 | *Bouteloua gracilis* | 0–38 | – |
| 5 | **Other Native Grasses** | | | 285–475 | |
| | slender wheatgrass | ELTR7 | *Elymus trachycaulus* | 190–285 | – |
| | plains bluegrass | POAR3 | *Poa arida* | 95–190 | – |
| | foxtail barley | HOJU | *Hordeum jubatum* | 0–95 | – |
| | Graminoid (grass or grass-like) | 2GRAM | *Graminoid (grass or grass-like)* | 0–38 | – |
| 6 | **Non-Native Grasses** | | | 0–38 | |
| | Kentucky bluegrass | POPR | *Poa pratensis* | 0–38 | – |
| 7 | **Grass-likes** | | | 190–380 | |
| | sedge | CAREX | *Carex* | 95–285 | – |
| | spikerush | ELEOC | *Eleocharis* | 0–190 | – |
| | mountain rush | JUARL | *Juncus arcticus ssp. littoralis* | 0–190 | – |
| | rush | JUNCU | *Juncus* | 0–190 | – |
| | bulrush | SCHOE6 | *Schoenoplectus* | 0–190 | – |
| | Grass-like (not a true grass) | 2GL | *Grass-like (not a true grass)* | 0–95 | – |
| **Forb** | | | | | |
| 8 | **Forbs** | | | 0–95 | |
| | Forb, introduced | 2FI | *Forb, introduced* | 0–38 | – |
| | Forb, native | 2FN | *Forb, native* | 0–38 | – |
| | Cuman ragweed | AMPS | *Ambrosia psilostachya* | 0–19 | – |
| | white sagebrush | ARLU | *Artemisia ludoviciana* | 0–19 | – |
| | milkvetch | ASTRA | *Astragalus* | 0–19 | – |
| | scouringrush horsetail | EQHY | *Equisetum hyemale* | 0–19 | – |
| | showy prairie gentian | EUEXR | *Eustoma exaltatum ssp. russellianum* | 0–19 | – |
| | Pursh seepweed | SUCA2 | *Suaeda calceoliformis* | 0–19 | – |
| | white heath aster | SYER | *Symphyotrichum ericoides* | 0–19 | – |
| | common dandelion | TAOF | *Taraxacum officinale* | 0–19 | – |

| | | | | | |
|---|---|---|---|---|---|
| | marsh arrowgrass | TRPA28 | *Triglochin palustris* | 0–19 | – |

**Table 12. Community 2.1 plant community composition**

| Group | Common Name | Symbol | Scientific Name | Annual Production (Lb/Acre) | Foliar Cover (%) |
|---|---|---|---|---|---|
| **Grass/Grasslike** | | | | | |
| 1 | **Sacaton** | | | 0–100 | |
| | alkali sacaton | SPAI | *Sporobolus airoides* | 0–100 | – |
| 2 | **Saltgrass** | | | 600–900 | |
| | saltgrass | DISP | *Distichlis spicata* | 600–900 | – |
| 4 | **Warm-Season Grasses** | | | 0–50 | |
| | blue grama | BOGR2 | *Bouteloua gracilis* | 0–20 | – |
| | scratchgrass | MUAS | *Muhlenbergia asperifolia* | 0–20 | – |
| | sand dropseed | SPCR | *Sporobolus cryptandrus* | 0–20 | – |
| 5 | **Other Native Grasses** | | | 50–150 | |
| | foxtail barley | HOJU | *Hordeum jubatum* | 50–150 | – |
| | plains bluegrass | POAR3 | *Poa arida* | 0–20 | – |
| | Graminoid (grass or grass-like) | 2GRAM | *Graminoid (grass or grass-like)* | 0–20 | – |
| 6 | **Non-Native Grasses** | | | 0–20 | |
| | Kentucky bluegrass | POPR | *Poa pratensis* | 0–20 | – |
| 7 | **Grass-likes** | | | 50–150 | |
| | Grass-like (not a true grass) | 2GL | *Grass-like (not a true grass)* | 0–50 | – |
| | sedge | CAREX | *Carex* | 0–50 | – |
| | spikerush | ELEOC | *Eleocharis* | 0–50 | – |
| | mountain rush | JUARL | *Juncus arcticus ssp. littoralis* | 0–50 | – |
| | rush | JUNCU | *Juncus* | 0–50 | – |
| | bulrush | SCHOE6 | *Schoenoplectus* | 0–50 | – |
| **Forb** | | | | | |
| 8 | **Forbs** | | | 0–50 | |
| | Forb, introduced | 2FI | *Forb, introduced* | 0–20 | – |
| | Forb, native | 2FN | *Forb, native* | 0–20 | – |
| | Cuman ragweed | AMPS | *Ambrosia psilostachya* | 0–20 | – |
| | white sagebrush | ARLU | *Artemisia ludoviciana* | 0–20 | – |
| | milkvetch | ASTRA | *Astragalus* | 0–10 | – |
| | scouringrush horsetail | EQHY | *Equisetum hyemale* | 0–10 | – |
| | showy prairie gentian | EUEXR | *Eustoma exaltatum ssp. russellianum* | 0–10 | – |
| | Pursh seepweed | SUCA2 | *Suaeda calceoliformis* | 0–10 | – |
| | white heath aster | SYER | *Symphyotrichum ericoides* | 0–10 | – |
| | common dandelion | TAOF | *Taraxacum officinale* | 0–10 | – |
| | marsh arrowgrass | TRPA28 | *Triglochin palustris* | 0–10 | – |

## Animal community

Grazing by domestic livestock is one of the major income-producing industries in the area. Rangeland in this area may provide yearlong forage. During the dormant period, the forage for livestock will likely be lacking protein to meet livestock requirements, and added protein will allow ruminants to better utilize the energy stored in grazed plant materials. A forage quality test (either directly or through fecal sampling) should be used to determine the level of supplementation needed.

## Hydrological functions

Forage production on these sites is limited by saline conditions. Proper management is critical to the continued productivity of these sites. Grass reestablishment on overgrazed or tilled sites is often slow and difficult because increased evaporation (from exposed soil surfaces) causes increased salt concentration at the soil surface. The Wildhorse soils on this site are in Hydrologic Soil Group A, but may include localized areas of other soils in Groups B and C. Infiltration rates for Wildhorse soils are extremely high, but high water tables provide subirrigation of salt tolerant vegetation. Surrounding upland areas tend to have permeable soils and surface inflow peaks on these sites are often muted. These sites do not flood or are flooded only occasionally for brief periods.

Rills, gullies and water flow patterns are not present. Pedestals are only slightly present. Litter falls in place, and signs of movement are not common. Chemical and physical crusts are rare, and not significant for hydrologic considerations. Cryptogamic crusts may be present but are not significant for hydrologic considerations. Overall this site has the appearance of being stable and productive except areas of white crust (salts) may be present.

## Recreational uses

This site provides hunting opportunities for upland game species. The wide variety of plants which bloom from spring until fall have an esthetic value that appeals to visitors.

## Wood products

No appreciable wood products are present on the site.

## Other products

Seed harvest of native plant species can provide additional income on this site.

## Inventory data references

Information presented here has been derived from NRCS clipping data and other inventory data. Field observations from range trained personnel was also used. Those involved in developing this site include: Wayne Bachman, Soil Scientist, NRCS; Stan Boltz, Range Management Specialist, NRCS; Anna Ferguson, Soil Conservationist, NRCS; Roger Hammer, Soil Scientist, NRCS; Dana Larsen, Range Management Specialist, NRCS; Dave Schmidt, Rangeland Management Specialist, NRCS; Kim Stine, Rangeland Management Specialist, NRCS.

## Other references

High Plains Regional Climate Center, University of Nebraska, 830728 Chase Hall, Lincoln, NE 68583-0728. (http://www.hprcc.unl.edu/)
USDA, NRCS. National Water and Climate Center, 101 SW Main, Suite 1600, Portland, OR 97204-3224. (http://wcc.nrcs.usda.gov)
USDA, NRCS. National Range and Pasture Handbook, September 1997
USDA, NRCS. National Soil Information System, Information Technology Center, 2150 Centre Avenue, Building A, Fort Collins, CO 80526. (http://nasis.nrcs.usda.gov)
USDA, NRCS, 2002. National Soil Survey Handbook, title 430-VI. (http://soils.usda.gov/technical/handbook/)

## Contributors

Dana Larsen
Stan Boltz

## Rangeland health reference sheet

Interpreting Indicators of Rangeland Health is a qualitative assessment protocol used to determine ecosystem condition based on benchmark characteristics described in the Reference Sheet. A suite of 17 (or more) indicators are typically considered in an assessment. The ecological site(s) representative of an assessment location must be known prior to applying the protocol and must be verified based on soils and climate. Current plant community cannot be used to identify the ecological site.

| | |
|---|---|
| Author(s)/participant(s) | Stan Boltz |
| Contact for lead author | Stan Boltz, stanley.boltz@sd.usda.gov, 605-352-1236 |
| Date | 08/01/2006 |
| Approved by | Stan Boltz |
| Approval date | |
| Composition (Indicators 10 and 12) based on | Annual Production |

## Indicators

1. **Number and extent of rills:** None.

---

2. **Presence of water flow patterns:** None.

---

3. **Number and height of erosional pedestals or terracettes:** None.

---

4. **Bare ground from Ecological Site Description or other studies (rock, litter, lichen, moss, plant canopy are not bare ground):** Bare ground is typically less than 5 percent.

---

5. **Number of gullies and erosion associated with gullies:** None.

---

6. **Extent of wind scoured, blowouts and/or depositional areas:** None.

---

7. **Amount of litter movement (describe size and distance expected to travel):** Litter falls in place.

---

8. **Soil surface (top few mm) resistance to erosion (stability values are averages - most sites will show a range of values):** Soil aggregate stability ratings should typically be 5 to 6, normally 6. Surface organic matter adheres to the soil surface.

---

9. **Soil surface structure and SOM content (include type of structure and A-horizon color and thickness):** A-horizon should be 1 to 7 inches thick with very dark grayish brown colors when moist. Structure typically is medium granular in the upper A-horizon.

10. **Effect of community phase composition (relative proportion of different functional groups) and spatial distribution on infiltration and runoff:** Deep rooted species (mid and tall rhizomatous cool- and warm-season grasses and grass-likes) with fine and coarse roots positively influences infiltration.

11. **Presence and thickness of compaction layer (usually none; describe soil profile features which may be mistaken for compaction on this site):** None present.

12. **Functional/Structural Groups (list in order of descending dominance by above-ground annual-production or live foliar cover using symbols: >>, >, = to indicate much greater than, greater than, and equal to):**

    Dominant: Mid, warm-season bunchgrasses >>

    Sub-dominant: Mid, cool-season grasses > tall, warm-season grasses = short, warm-season grasses >

    Other: Grass-like species > mid, cool-season bunchgrasses > forbs

    Additional:

13. **Amount of plant mortality and decadence (include which functional groups are expected to show mortality or decadence):** Very little evidence of decadence or mortality.

14. **Average percent litter cover (%) and depth ( in):** Litter cover is typically 60 to 80 percent, and depth of litter ranges from 0.25 to 0.5 inches.

15. **Expected annual annual-production (this is TOTAL above-ground annual-production, not just forage annual-production):** Total annual production ranges from 2,100 to 3,500 pounds/acre, with the reference values being 2,800 pounds/acre (air-dry basis).

16. **Potential invasive (including noxious) species (native and non-native). List species which BOTH characterize degraded states and have the potential to become a dominant or co-dominant species on the ecological site if their future establishment and growth is not actively controlled by management interventions. Species that become dominant for only one to several years (e.g., short-term response to drought or wildfire) are not invasive plants. Note that unlike other indicators, we are describing what is NOT expected in the reference state for the ecological site:** State and local noxious weeds; also Kentucky bluegrass. Russian olive can dominate this site in localized areas. Most invasive species will occupy the perimeter of this site.

17. **Perennial plant reproductive capability:** Perennial grasses and grass-likes should have vigorous rhizomes or tillers.