Ecological site R067BY031CO
Sandy Bottomland

Last updated: 9/08/2023
Accessed: 04/20/2024

General information

Provisional. A provisional ecological site description has undergone quality control and quality assurance review. It contains a working state and transition model and enough information to identify the ecological site.

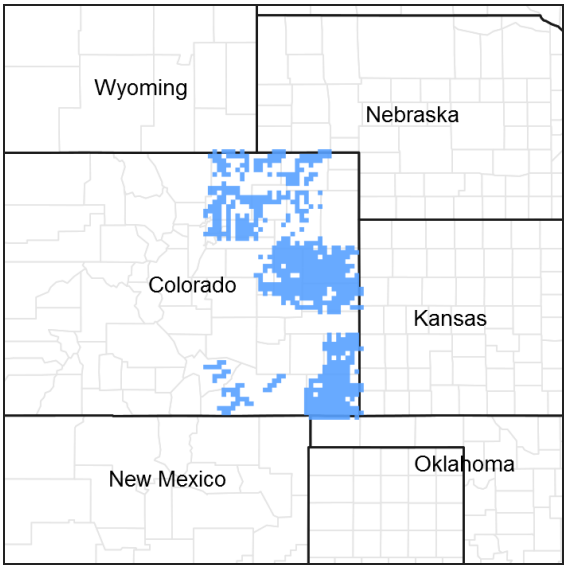

Figure 1. Mapped extent

Areas shown in blue indicate the maximum mapped extent of this ecological site. Other ecological sites likely occur within the highlighted areas. It is also possible for this ecological site to occur outside of highlighted areas if detailed soil survey has not been completed or recently updated.

MLRA notes

Major Land Resource Area (MLRA): 067B–Central High Plains, Southern Part

MLRA 67B occurs in eastern Colorado and consists of rolling plains and river valleys. Some canyonlands occur in the southeast portion. The major rivers are the South Platte and Arkansas which flow from the Rocky Mountains to Nebraska and Kansas. Other rivers in the MLRA include the Cache la Poudre and Republican and associated tributaries. This MLRA is traversed by Interstate 25, 70 and 76; and U.S. Highways 50 and 287. Major land uses include 54 percent rangeland, 35 percent cropland, and 2 percent pasture and hayland. Urban, developed open space, and miscellaneous land occupy approximately 9 percent. Major Cities in this area include Fort Collins, Greeley, Sterling, and Denver. Other cities include Limon, Cheyenne Wells, and Springfield. Land ownership is mostly private. Federal lands include Pawnee and Comanche National Grasslands (U.S. Forest Service), Sand Creek Massacre National Historic Site (National Park Service), and Rocky Mountain Arsenal National Wildlife Refuge (U.S. Fish & Wildlife Service). State Parks include Cherry Creek and Chatfield Reservoirs, and Barr and Jackson Lakes.

This region is periodically affected by severe drought, including the historic “Dust Bowl” of the 1930s. Dust storms may form during drought years in windy periods. Elevations range from 3,400 to 6,000 feet. The Average annual precipitation ranges from 14 to17 inches per year and ranges from 13 inches to over 18 inches, depending upon location. Precipitation occurs mostly during the growing season, often during rapidly developing thunderstorms. Mean annual air temperature (MAAT) is 48 to 52 degrees Fahrenheit. Summer temperatures may exceed 100

degrees Fahrenheit. Winter temperatures may be sub-zero, and snowfall varies from 20 to 40 inches per year. Snow cover frequently melts between snow events.

LRU notes

Land Resource Unit (LRU) A is the northeast portion of MLRA 67B, to an extent of approximately 9 million acres. Most of the LRU is rangeland, and includes the Pawnee National Grassland. Dryland winter wheat/fallow rotations (that may include dryland corn, sunflowers, and sorghum) are grown in most counties. Irrigated cropland is utilized in the South Platte Valley. Small acreage and urban ownership are more concentrated on the Front Range. This LRU is found in portions of Adams, Arapahoe, Elbert, Kit Carson, Larimer, Lincoln, Logan, Washington, and Weld counties. Other counties include Boulder, Cheyenne, Denver, Jefferson, and Yuma. The soil moisture regime is aridic ustic. The mean annual air temperature (MAAT) is 50 degrees Fahrenheit.

LRU B is in the southeast portion of MLRA 67B (2.6 million acres) and includes portions of Baca, Bent, Cheyenne, Kiowa, Las Animas, and Prowers counties. Most of the LRU remains in rangeland and includes the Comanche National Grassland. On the farmed land, a system of dryland winter wheat/fallow rotations (that may include dryland corn, sunflowers, and sorghum) is implemented. Irrigated cropland is found in the Arkansas Valley. The soil moisture regime is aridic ustic and the MAAT is 52 degrees Fahrenheit.

LRU C occurs in portions of Morgan and Weld counties (approximately 1.2 million acres). Most of LRU C is in rangeland. On the farmed land, a system of dryland winter wheat/fallow rotations (that may include dryland corn, sunflowers, and sorghum) is implemented. The soil moisture regime is ustic aridic and the MAAT is 48 degrees Fahrenheit.

Classification relationships

MLRA 67B is in the Colorado Piedmont and Raton Sections of the Great Plains Province (USDA, 2006). The MLRA is further defined by Land Resource Units (LRUs) A, B, and C. Features such as climate, geology, landforms, and key vegetation further refine these concepts and are described in other sections of the Ecological Site Description (ESD). NOTE: To date, these LRUs are DRAFT.

Relationship to Other Hierarchical Classifications:
NRCS Classification Hierarchy: Physiographic Division, Physiographic Province, Physiographic Section, Land Resource Region, Major Land Resource Area, Land Resource Unit (Fenneman, 1946).
USFS Classification Hierarchy: Domain, Division, Province, Section, Subsection,
Land Type Association: Land Type, Land Type Phase (Cleland et al, 1997).

REVISION NOTES:
The Sandy Bottomland Ecological Site was developed from an earlier version of the site, 2004 revised 2007. This earlier version was based on input from the Natural Resource Conservation Service (formerly the Soil Conservation Service) and historical information obtained from the Sandy Bottomland Range Site descriptions (1975). This ESD meets the Provisional requirements of the National Ecological Site Handbook (NESH). This ESD will continue refinement towards an Approved status according to the NESH.

Ecological site concept

The Sandy Bottomland Ecological Site is a run-on site that is not within four feet of the water table, and has no redoximorphic features. It is subject to flooding and has subsoil textures of coarse sand, sand, loamy coarse sand, loamy sand, or loamy fine sand.

Associated sites

R067BY002CO	**Loamy Plains** This ecological site is commonly adjacent.
R067BY022CO	**Choppy Sands** This ecological site is commonly adjacent.

R067BY024CO	**Sandy Plains** This ecological site is commonly adjacent.
R067BY015CO	**Deep Sand** This ecological site is commonly adjacent.
R067BY073CO	**Riparian** This ecological site is commonly adjacent.

Similar sites

R067BY022CO	**Choppy Sands** The Choppy Sands Ecological Site is a run-off site on slopes of greater than five percent with terracettes.
R067BY015CO	**Deep Sand** The Deep Sand Ecological Site is a run-off site.

Table 1. Dominant plant species

Tree	Not specified
Shrub	(1) *Prunus pumila var. besseyi* (2) *Amorpha canescens*
Herbaceous	(1) *Andropogon hallii* (2) *Calamovilfa longifolia*

Physiographic features

This site occurs on the floodplain or floodplain-step between the channel and the higher stream terraces in the river valleys. It may also be found in sandy drainageways of the dissected plains that are subject to extra moisture or runoff during rain events.

Table 2. Representative physiographic features

Landforms	(1) Flood plain (2) Flood-plain step
Runoff class	Negligible to very low
Flooding duration	Very brief (4 to 48 hours) to brief (2 to 7 days)
Flooding frequency	Rare to occasional
Ponding frequency	None
Elevation	3,300–5,500 ft
Slope	0–3%
Ponding depth	0 in
Water table depth	36–80 in
Aspect	Aspect is not a significant factor

Climatic features

Average annual precipitation across the MLRA extent is 14 to 17 inches, and ranges from 13 to over 18 inches, depending on location. Precipitation increases from north to south. Mean Annual Air Temperature (MAAT) is 50 degrees Fahrenheit in the northern part and increases to 52 degrees Fahrenheit in the southern part. Portions of Morgan and Weld counties are cooler and drier, the MAAT is 48 degrees Fahrenheit, and average precipitation is 13 to14 inches per year.

Two-thirds of the annual precipitation occurs during the growing season from mid-April to late September. Snowfall averages 30 inches per year, area-wide, but varies by location from 20 to 40 inches per year. Winds are estimated to average 9 miles per hour annually. Daytime winds are generally stronger than at night, and occasional strong

storms may bring periods of high winds with gusts to more than 90 mph. High-intensity afternoon thunderstorms may arise. The average length of the freeze-free period (28 degrees Fahrenheit) is 155 days from April 30th to October to 3rd. The average frost-free period (32 degrees Fahrenheit) is 136 days from May 11th to September 24th. July is the hottest month, and December and January are the coldest months. Summer temperatures average 90 degrees Fahrenheit and occasionally exceed 100 degrees Fahrenheit. Summer humidity is low and evaporation is high. Winters are characterized with frequent northerly winds, producing severe cold with temperatures occasionally dropping to -30 degrees Fahrenheit or lower. Blizzard conditions may form quickly. For detailed information, visit the Western Regional Climate Center website:
Western Regional Climate Center Historical Data Western U.S. Climate summaries, NOAA Coop Stations Colorado http://www.wrcc.dri.edu/summary/Climsmco.html.

Table 3. Representative climatic features

Frost-free period (characteristic range)	119-129 days
Freeze-free period (characteristic range)	134-151 days
Precipitation total (characteristic range)	14-17 in
Frost-free period (actual range)	102-132 days
Freeze-free period (actual range)	126-156 days
Precipitation total (actual range)	14-17 in
Frost-free period (average)	121 days
Freeze-free period (average)	142 days
Precipitation total (average)	15 in

Climate stations used

- (1) LIMON WSMO [USW00093010], Limon, CO
- (2) FT MORGAN [USC00053038], Fort Morgan, CO
- (3) NUNN [USC00056023], Nunn, CO
- (4) BRIGHTON 3 SE [USC00050950], Brighton, CO
- (5) BYERS 5 ENE [USC00051179], Byers, CO
- (6) CHEYENNE WELLS [USC00051564], Cheyenne Wells, CO
- (7) GREELEY UNC [USC00053553], Greeley, CO
- (8) SPRINGFIELD 7 WSW [USC00057866], Springfield, CO
- (9) BRIGGSDALE [USC00050945], Briggsdale, CO
- (10) FLAGLER 1S [USC00052932], Flagler, CO
- (11) KIT CARSON [USC00054603], Kit Carson, CO

Influencing water features

There are no water features associated with this ecological site.

Soil features

The soils on this site are very deep, moderately well to somewhat excessively drained soils that formed from alluvium. They typically have a moderately rapid to very rapid permeability class. The soil moisture regime is typically aridic ustic. The soil temperature regime is mesic.

The surface layer of the soils in this site are typically sand, sandy loam, or loamy sand, but may include fine sandy loam, loamy fine sand, or coarse sand. The surface layer ranges from 3 to 8 inches thick. The subsoil is typically sand, sandy loam, loamy sand, or coarse sand, but may include stratification of fine sandy loam, loamy fine sand, or clay loam. Rock fragments range from 0 to 15 percent in the underlying material, but are typically less than 5 percent. Soils in this site are typically leached of carbonates from 0 to 8 inches; some soils may have be leached to greater than 60 inches. These soils are susceptible to wind and water erosion where vegetative cover is inadequate. Wind scoured areas are inherent to this site, and some soil movement or pedestalling of plants may

occur.

Major soil series correlated to this ecological site include: Bankard, Ellicott, and Glenberg.

Other soil series that have been correlated to this site, but may eventually be re-correlated include: Riverwash and Sandy Alluvial Land.
Note: Revisions to soil surveys are on-going. For the most recent updates, visit the Web Soil Survey, the official site for soils information: http://websoilsurvey.nrcs.usda.gov/app/WebSoilSurvey.aspx.

The attributes listed below represent 0-40 inches in depth or to the first restrictive layer.

Table 4. Representative soil features

Parent material	(1) Alluvium
Surface texture	(1) Sand (2) Sandy loam (3) Loamy sand
Drainage class	Moderately well drained to somewhat excessively drained
Permeability class	Moderately rapid to very rapid
Soil depth	80 in
Surface fragment cover <=3"	0%
Surface fragment cover >3"	0%
Available water capacity (0-40in)	1.5–6 in
Calcium carbonate equivalent (0-40in)	0–5%
Electrical conductivity (0-40in)	0–2 mmhos/cm
Sodium adsorption ratio (0-40in)	0
Soil reaction (1:1 water) (0-40in)	6.6–8.4
Subsurface fragment volume <=3" (Depth not specified)	0–15%
Subsurface fragment volume >3" (Depth not specified)	0%

Ecological dynamics

The Sandy Bottomland ecological site is characterized by three states: Reference, Shrub, and Eroded. The Reference State is characterized by a dominance of warm-season tallgrasses (sand bluestem, prairie sandreed, and switchgrass). The Shrub State is dominated by sand sagebrush and a minor component of understory species (sand dropseed, Fendler threeawn). The Eroded State is characterized by annual forbs and grasses (sunflower, burningbush, Russian thistle, cheatgrass) and early successional plants (sandhill muhly, sand dropseed, Fendler threeawn, and lemon scurfpea).

Grazing by large herbivores without adequate recovery periods causes sand bluestem, prairie sandreed, and switchgrass to decrease. Sagebrush increases along with blue grama. Prairie sandreed may persist in remnant amounts protected by remaining shrubs. Cool-season grasses such as needle and thread, Indian ricegrass, and western wheatgrass, and key shrubs such as western sandcherry and leadplant decrease in frequency and production. Pacific peavine, purple prairie clover, and other highly palatable forbs also decrease. Sand dropseed, Fendler threeawn, annuals, and bare ground increase under heavy, continuous grazing.

The information in this ESD, including the state-and-transition model diagram (STM), was developed using

archeological and historical data, professional experience, and scientific studies. The information is representative of a dynamic set of plant communities that represent the complex interaction of several ecological processes. The plant composition has been determined by study of rangeland relic areas, areas protected from excessive disturbance, seasonal use pastures, short duration or time-controlled grazing strategies, and historical accounts.

The degree of grazing has a significant impact on the ecological dynamics of the site. This region was historically occupied by large grazing animals, such as bison, elk, pronghorn, and mule deer. Grazing by these large herbivores, along with climatic and seasonal weather fluctuations, had a major influence on the ecological dynamics of the site. Deer and pronghorn are widely distributed throughout the MLRA. Secondary influences of herbivory by species such as prairie dogs and other small rodents, insects, and root-feeding organisms continues to impact the vegetation.

Historically, grazing patterns by herds of large ungulates were driven by water distribution, precipitation events, drought events, and fire. It is believed that grazing periods would have been shorter, followed by longer recovery periods. These large migrating herds impacted the ecological processes of nutrient and hydrologic cycles, by urination, trampling (incorporation of litter into the soil surface), and breaking of surface crust, (which increases water infiltration).

Today, livestock grazing, especially beef cattle has been a major influence on the ecological dynamics of the site. Grazing management, coupled with the effects of annual climatic variations, largely dictates the plant communities for the site.

Recurrent drought has historically impacted the vegetation of this region. Changes in species composition vary depending upon the duration and severity of the drought cycle and prior grazing management. Drought events since 2002 have significantly increased mortality of blue grama and buffalograss in some locales.

This site developed with occasional fire as part of the ecological processes. Historic fire frequency (pre-industrial) is estimated at 10 to14 years (Guyette, 2012), randomly distributed, and started by lightning at various times throughout the growing season. Early human inhabitants also were likely to start fires for various reasons (deliberate or accidental). It is believed that fires were set as a management tool for attracting herds of large migratory herbivores (Stewart, 2002). The impact of fire over the past 100 years has been relatively insignificant due to the human control of wildfires and the lack of acceptance of prescribed fire as a management tool.

Mechanical treatment consisting of contour pitting, furrowing, terracing, chiseling, and disking has been practiced in the past. It was theorized that the use of this high-input technology would improve production and plant composition on rangeland. These high-cost practices have shown to have no significant long-term benefits on production or plant composition and have only resulted in a permanently rough ground surface. Prescribed grazing that mimics the historic grazing of herds of migratory herbivores, as described earlier, has been shown to result in desired improvements based on management goals for this ecological site.

Eastern Colorado was strongly affected by extended drought conditions in the “Dust Bowl” period of the 1930’s, with recurrent drought cycles in the 1950s and 1970s. Extreme to exceptional drought conditions have re-visited the area from 2002 to 2012, with brief interludes of near normal to normal precipitation years. Long-term effects of these latest drought events have yet to be determined. Growth of native cool-season plants begins about April 1 and continues to mid-June. Native warm-season plants begin growth about May 1 and continue to about August 15. Regrowth of cool-season plants occurs in September in most years, depending on the availability of moisture.

State and transition model

Ecosystem states

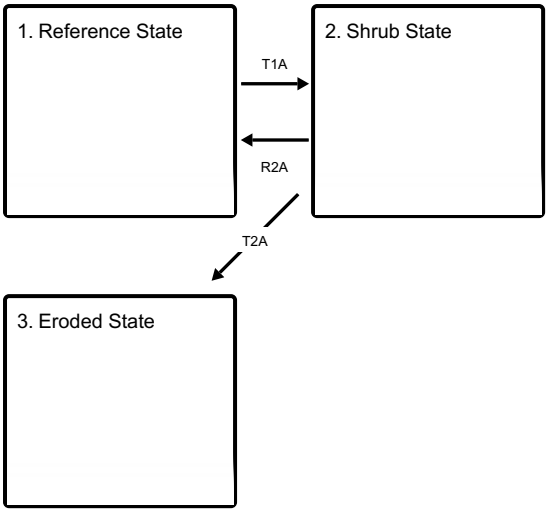

T1A - Excessive grazing. Lack of fire.

R2A - Brush management. Prescribed grazing. Prescribed fire.

T2A - Excessive grazing. Lack of fire.

State 1 submodel, plant communities

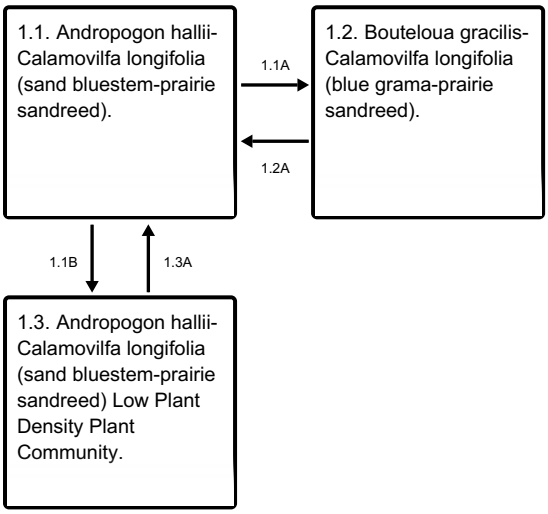

1.1A - Excessive grazing. Lack of fire.

1.1B - Non-use. Lack of fire.

1.2A - Prescribed grazing. Prescribed fire.

1.3A - Prescribed grazing. Prescribed fire.

State 2 submodel, plant communities

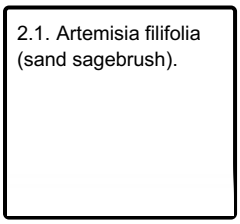

State 3 submodel, plant communities

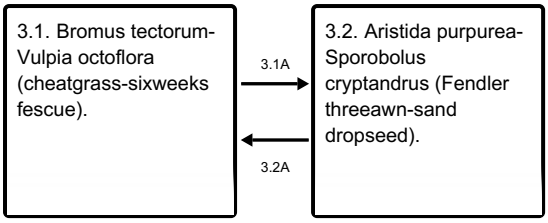

3.1A - Prescribed grazing. Prescribed fire.

3.2A - Excessive grazing. Lack of fire.

State 1
Reference State

The Reference State is defined by three native plant communities that are a result of periodic fire (or lack of fire), drought, herbivory, and ungulate grazers (or non-use). These events are part of the natural disturbance regime and climatic process that contribute to the development of the site. The Reference Plant Community (1.1) consists of tall and mid, warm- and cool-season grasses, forbs, and shrubs. This plant community is dominated by warm-season tallgrasses. The 1.2 Community is dominated by blue grama and sand sagebrush, and is at risk of exceeding the resilience limits of the Reference State and transitioning to the Shrub State (State 2). The 1.3 Community resembles the Reference Plant Community with lower plant density and excessive amounts of litter. A loss of plant cover and an increase in bare ground creates the probability of wind erosion. Drought-induced wind scouring coupled with disturbance (wildfire, heavy, continuous grazing, rodents, and vehicle traffic) can lead to accelerated erosion. The following paragraphs are narratives for each of the described plant communities. These plant communities may not represent every possibility, but they probably are the most prevalent and repeatable plant communities that exist on this ecological site. The associated species composition table has been developed from the best available knowledge at the time of this revision. As more data is collected, some, of these plant communities may be adjusted or removed, and new ones may be added.

Dominant plant species

- plains cottonwood (*Populus deltoides ssp. monilifera*), tree
- western sandcherry (*Prunus pumila var. besseyi*), shrub
- leadplant (*Amorpha canescens*), shrub
- sand bluestem (*Andropogon hallii*), grass
- prairie sandreed (*Calamovilfa longifolia*), grass

Community 1.1
Andropogon hallii-Calamovilfa longifolia (sand bluestem-prairie sandreed).

This is the interpretive plant community. This plant community evolved with grazing by large herbivores, is well suited for grazing by domestic livestock, and can be found on areas that are properly managed with grazing. The reference plant community consists chiefly of warm-season tallgrasses. Principle dominants are sand bluestem, prairie sandreed, and switchgrass. Subdominant grasses include needle and thread, blue grama, little bluestem, and western wheatgrass. Significant forbs and shrubs are pacific peavine, evening primrose, prairie clovers, leadplant, and western sandcherry. Cottonwoods may be present. The potential vegetation is about 70 to 85 percent grasses or grass-like plants, 8 to15 percent forbs and 7 to 15 percent shrubs. Grazing that allows for adequate recovery periods after each grazing event and proper stocking maintains this community. Continual or repeated spring grazing with summer deferment reduces the cool-season component and increases the warm-season grasses. Spring deferment and continual or repeated summer grazing increases the cool-season component and decrease the warm-seasons. This plant community is resistant to many disturbances except excessive grazing, plowing, uncontrolled fire events, and urban land use development. The diversity in plant species allows for high drought tolerance. Plant litter is properly distributed with very little movement off-site and natural plant mortality is very low. This is a sustainable plant community in terms of soil stability, watershed function, and biologic integrity. Production in this community varies from 1,200 to 2,400 pounds of air-dry vegetation per acre per year depending on the weather conditions, with a Representative Value of 1,850 pounds.

Dominant plant species

- plains cottonwood (*Populus deltoides ssp. monilifera*), tree
- western sandcherry (*Prunus pumila var. besseyi*), shrub
- leadplant (*Amorpha canescens*), shrub
- sand bluestem (*Andropogon hallii*), grass
- prairie sandreed (*Calamovilfa longifolia*), grass

Table 5. Annual production by plant type

Plant Type	Low (Lb/Acre)	Representative Value (Lb/Acre)	High (Lb/Acre)
Grass/Grasslike	945	1420	1800
Forb	135	210	285
Shrub/Vine	120	200	285
Tree	0	20	30
Total	**1200**	**1850**	**2400**

Figure 9. Plant community growth curve (percent production by month). CO6709, Warm-season dominant, cool-season subdominant; MLRA-67B; upland coarse textured soils..

Jan	Feb	Mar	Apr	May	Jun	Jul	Aug	Sep	Oct	Nov	Dec
0	0	2	7	25	35	15	10	5	1	0	0

Community 1.2
Bouteloua gracilis-Calamovilfa longifolia (blue grama-prairie sandreed).

Sand bluestem, prairie sandreed, switchgrass, western sandcherry, and leadplant have decreased in frequency and production. Blue grama and sand sagebrush have increased. Sand dropseed, Fendler threeawn, slimflower scurfpea, and Cuman ragweed have also increased. This plant community is relatively stable but at risk of losing some of the tallgrass species, palatable forbs, and shrubs. The reduction of tallgrass species, nitrogen-fixing forbs, key shrub components, and increased warm-season shortgrass has altered the biotic integrity of this plant community. The nutrient cycle, water cycle, and energy flow are at risk of becoming impaired. The production varies from 500 to 1,300 pounds of air-dry vegetation per acre per year depending on the weather conditions and amount of mid and tallgrass species still present. Production averages 950 pounds of air-dry vegetation per acre per year in a normal year.

Dominant plant species

- plains cottonwood (*Populus deltoides ssp. monilifera*), tree
- sand sagebrush (*Artemisia filifolia*), shrub
- blue grama (*Bouteloua gracilis*), grass
- prairie sandreed (*Calamovilfa longifolia*), grass

Figure 10. Plant community growth curve (percent production by month). CO6710, Warm-season dominant; MLRA-67B; upland coarse-textured soils..

Jan	Feb	Mar	Apr	May	Jun	Jul	Aug	Sep	Oct	Nov	Dec
0	0	0	5	20	40	20	10	5	0	0	0

Community 1.3
Andropogon hallii-Calamovilfa longifolia (sand bluestem-prairie sandreed) Low Plant Density Plant Community.

This plant community occurs when grazing is removed for long periods of time in the absence of fire. Plant composition is similar to the Reference Plant Community, though in time individual species production and frequency is lower. Much of the nutrients are tied up in excessive litter. The semiarid environment and the absence

of animal traffic impedes the breakdown of litter slowing nutrient cycling. Increased standing dead canopy limits sunlight from reaching plant crowns. Many plants, especially bunchgrasses die-off. Increased litter and absence of grazing or fire reduce seed germination and establishment. This community changes rapidly with grazing that allows animal impact and adequate recovery periods between grazing events. Long term non-use causes plant decadence and mortality to increase, and wind scoured areas may eventually develop. Once this happens it will require increased time to shift this plant community to the Reference Plant Community. Production can vary from 100 to 1,000 pounds of air-dry vegetation per acre per year depending on weather conditions and the plants that are present.

Dominant plant species

- plains cottonwood (*Populus deltoides ssp. monilifera*), tree
- western sandcherry (*Prunus pumila var. besseyi*), shrub
- leadplant (*Amorpha canescens*), shrub
- sand bluestem (*Andropogon hallii*), grass
- prairie sandreed (*Calamovilfa longifolia*), grass

Figure 11. Plant community growth curve (percent production by month). CO6711, Warm-season dominant, cool-season subdominant, excess litter; MLRA-67B; upland coarse texture soil..

Jan	Feb	Mar	Apr	May	Jun	Jul	Aug	Sep	Oct	Nov	Dec
0	0	2	8	20	35	17	10	5	3	0	0

Pathway 1.1A
Community 1.1 to 1.2

This community pathway is driven by excessive grazing and lack of fire. Drought, in combination with this type of management, accelerates this process.

Pathway 1.1B
Community 1.1 to 1.3

Non-use and lack of fire shifts this plant community to the 1.3 Community. Impairment of nutrient cycling is a concern.

Pathway 1.2A
Community 1.2 to 1.1

This community pathway is driven by grazing with proper stocking and adequate recovery periods for the dominate reference community species. Prescribed fire accelerates this process.

Conservation practices

Prescribed Burning
Prescribed Grazing

Pathway 1.3A
Community 1.3 to 1.1

Grazing that allows for adequate recovery opportunity, proper stocking rate, and fire shift the 1.3 Community to the Reference Plant Community. This pathway can occur relatively fast.

Conservation practices

Prescribed Burning
Prescribed Grazing

State 2
Shrub State

The Shrub State develops due to heavy, continuous grazing that does not allow adequate recovery opportunity between grazing events. It is defined by one plant community phase. The Reference State has been driven beyond the limits of ecosystem resilience and has crossed a threshold to the Shrub State. The designation of the Shrub State denotes changes in plant species composition. This change in plant species affects the hydrology, erosion potential, forage production, and wildlife habitat. Understory plants may be negatively affected by shrubs reducing the availability of light, soil moisture, and soil nutrients. As the size and density of shrubs increase, the cover and productivity of understory plants decrease. As establishment of shrubs increase, fine-fuel loads decrease. Prescribed fire can become an ineffective tool to eradicate or decrease the shrubs due to the lack of fine fuel loads.

Dominant plant species

- plains cottonwood (*Populus deltoides ssp. monilifera*), tree
- sand sagebrush (*Artemisia filifolia*), shrub
- sand dropseed (*Sporobolus cryptandrus*), grass
- blue grama (*Bouteloua gracilis*), grass

Community 2.1
Artemisia filifolia (sand sagebrush).

This plant community is dominated almost entirely by sand sagebrush with little understory species present. Favorable species that remain are few and are protected by the sagebrush. The plant community is created with continuous, heavy grazing that does not allow adequate recovery periods between grazing events. Further continuous, heavy grazing reduces, and can eliminate, the remaining grass to a point where only sagebrush remains. Species diversity and production have decreased substantially. Litter levels are low. Watershed function at this point is greatly reduced. Carbon sequestration is greatly reduced. Nutrient cycle and energy flow have been impaired. Bare areas can form or enlarge rather easily leading to possible wind scoured areas. Production can vary from 50 to 1,300 pounds of air-dry vegetation (primarily sand sagebrush) per acre per year depending on the amount of sand sage present and the weather conditions. An average of 500 pounds can be expected primarily from sand sagebrush in a normal year.

Dominant plant species

- plains cottonwood (*Populus deltoides ssp. monilifera*), tree
- sand sagebrush (*Artemisia filifolia*), shrub
- sand dropseed (*Sporobolus cryptandrus*), grass
- blue grama (*Bouteloua gracilis*), grass

Figure 12. Plant community growth curve (percent production by month). CO6710, Warm-season dominant; MLRA-67B; upland coarse-textured soils..

Jan	Feb	Mar	Apr	May	Jun	Jul	Aug	Sep	Oct	Nov	Dec
0	0	0	5	20	40	20	10	5	0	0	0

State 3
Eroded State

The Eroded State is characterized by two plant community phases that are the result of long-term heavy, continuous grazing without adequate recovery opportunity between grazing events. The development of this state indicates an ecological threshold has been crossed as a result of the disturbance. The designation of the Eroded State denotes changes in infiltration, runoff, aggregate stability, and species composition. The changes in water movement and the plant community affect changes in hydrologic functionality, biotic integrity, and soil and site stability. Infiltration, runoff, and soil erosion vary depending on the vegetation present.

Dominant plant species

- sand sagebrush (*Artemisia filifolia*), shrub
- cheatgrass (*Bromus tectorum*), grass

- sixweeks fescue (*Vulpia octoflora*), grass
- Russian thistle (*Salsola*), other herbaceous
- burningbush (*Bassia scoparia*), other herbaceous

Community 3.1
Bromus tectorum-Vulpia octoflora (cheatgrass-sixweeks fescue).

Bare ground has significantly increased. Further continuous grazing will cause wind scoured areas to increase. This condition is not stable due to bare areas that are continually eroded by wind. Production from this plant community phase can vary greatly depending on the plant density and weather conditions in any year. Cheatgrass, Japanese brome, burningbush, Russian thistle, annual sunflower, pigweed, sixweeks fescue, and annual buckwheat are common. Wind erosion is a concern. Production can vary from 0 to 200 pounds per acre of air-dry vegetation per year.

Dominant plant species

- sand sagebrush (*Artemisia filifolia*), shrub
- cheatgrass (*Bromus tectorum*), grass
- sixweeks fescue (*Vulpia octoflora*), grass
- Russian thistle (*Salsola*), other herbaceous
- burningbush (*Bassia scoparia*), other herbaceous

Community 3.2
Aristida purpurea-Sporobolus cryptandrus (Fendler threeawn-sand dropseed).

This plant community will most likely develop with continuous, heavy grazing, wildfire, or any type of physical disturbance of the Sand Sagebrush Plant Community. Fendler threeawn, sand dropseed, sandhill muhly, lemon scurfpea, sixweeks fescue, and cheatgrass occupy this plant community. Production and litter levels are extremely low. The nutrient cycle, water cycle, and energy flow are greatly reduced. Erosion is occurring. Organic matter and carbon reserves are greatly reduced. Production varies greatly (50 – 300 pounds of air-dry vegetation per acre per year) depending on the plant density and weather conditions in any year.

Dominant plant species

- sand sagebrush (*Artemisia filifolia*), shrub
- Fendler threeawn (*Aristida purpurea var. longiseta*), grass
- sand dropseed (*Sporobolus cryptandrus*), grass
- Russian thistle (*Salsola*), other herbaceous
- burningbush (*Bassia scoparia*), other herbaceous

Pathway 3.1A
Community 3.1 to 3.2

Prescribed grazing with adequate recovery opportunity between grazing events and prescribed fire shift this plant community to the 3.2 Community. Controlled animal impact together with an appropriate grazing prescription begins to heal wind scour areas.

Conservation practices

Prescribed Burning
Prescribed Grazing

Pathway 3.2A
Community 3.2 to 3.1

Excessive grazing and lack of fire shift this plant community back to the 3.1 Community. Wind erosion is a concern and wind scour areas can increase.

Transition T1A
State 1 to 2

The triggers for this transition are excessive grazing and lack of fire. The biotic integrity and soil and site stability of the site are the impaired ecological processes.

Restoration pathway R2A
State 2 to 1

Management actions required to recover the Reference State include the removal of sand sagebrush to appropriate levels of canopy cover together with prescribed grazing and proper stocking. Prescription fire might or might not be an option due to the lack of a fine fuel load. Chemical treatment of sand sagebrush is an option. Precaution and care should be taken when attempting this treatment method. The residual ecosystem properties, such as seed sources, species composition, nutrient content, and hydrologic properties, greatly influence the rate and probability of successful restoration. Brush management alone will not restore this site, and is only supplemental to prescribed grazing for this restoration pathway. Recommendations include a consultation and field evaluation prior to undertaking restoration activities.

Conservation practices

Brush Management
Prescribed Burning
Prescribed Grazing

Transition T2A
State 2 to 3

Long-term heavy, continuous grazing without adequate recovery periods between grazing events, and a lack of prescribed fire are the drivers that cause the loss of state resilience and result in a shift between the Shrub State and the Eroded State. Ecological functions have been compromised. The effects of this ecological threshold being crossed include changes in aggregate stability, nutrient availability, plant cover, and hydrologic function. Accelerated wind erosion is a concern.

Additional community tables

Table 6. Community 1.1 plant community composition

Group	Common Name	Symbol	Scientific Name	Annual Production (Lb/Acre)	Foliar Cover (%)
Grass/Grasslike					
1				1295–1573	
	sand bluestem	ANHA	*Andropogon hallii*	463–555	–
	prairie sandreed	CALO	*Calamovilfa longifolia*	278–463	–
	switchgrass	PAVI2	*Panicum virgatum*	185–370	–
	Indiangrass	SONU2	*Sorghastrum nutans*	93–185	–
	needle and thread	HECOC8	*Hesperostipa comata ssp. comata*	56–130	–
	blue grama	BOGR2	*Bouteloua gracilis*	19–93	–
	Grass, perennial	2GP	*Grass, perennial*	0–93	–
	western wheatgrass	PASM	*Pascopyrum smithii*	19–93	–
	little bluestem	SCSC	*Schizachyrium scoparium*	19–93	–
	sideoats grama	BOCU	*Bouteloua curtipendula*	0–56	–
	Canada wildrye	ELCA4	*Elymus canadensis*	19–56	–
	composite dropseed	SPCOC2	*Sporobolus compositus var. compositus*	19–56	–

	sand dropseed	SPCR	*Sporobolus cryptandrus*	19–56	–
	sandhill muhly	MUPU2	*Muhlenbergia pungens*	19–37	–
	thin paspalum	PASE5	*Paspalum setaceum*	19–37	–
	Indian ricegrass	ACHY	*Achnatherum hymenoides*	19–37	–
	hairy grama	BOHI2	*Bouteloua hirsuta*	19–37	–
	sun sedge	CAINH2	*Carex inops ssp. heliophila*	19–37	–
	Fendler threeawn	ARPUL	*Aristida purpurea var. longiseta*	19–37	–
	blowout grass	REFL	*Redfieldia flexuosa*	19–37	–
	prairie Junegrass	KOMA	*Koeleria macrantha*	0–19	–
	thickspike wheatgrass	ELLAL	*Elymus lanceolatus ssp. lanceolatus*	0–19	–
	Great Plains flatsedge	CYLU2	*Cyperus lupulinus*	0–19	–
	saltgrass	DISP	*Distichlis spicata*	0–19	–
	sixweeks fescue	VUOC	*Vulpia octoflora*	0–19	–
Forb					
2				148–278	
	Forb, perennial	2FP	*Forb, perennial*	37–130	–
	manystem pea	LAPO2	*Lathyrus polymorphus*	19–56	–
	dotted blazing star	LIPU	*Liatris punctata*	19–37	–
	purple prairie clover	DAPUP	*Dalea purpurea var. purpurea*	19–37	–
	silky prairie clover	DAVI	*Dalea villosa*	19–37	–
	broadbeard beardtongue	PEAN4	*Penstemon angustifolius*	19–37	–
	spiny phlox	PHHO	*Phlox hoodii*	0–19	–
	lemon scurfpea	PSLA3	*Psoralidium lanceolatum*	0–19	–
	upright prairie coneflower	RACO3	*Ratibida columnifera*	0–19	–
	scarlet globemallow	SPCO	*Sphaeralcea coccinea*	0–19	–
	white heath aster	SYERE	*Symphyotrichum ericoides var. ericoides*	0–19	–
	prairie spiderwort	TROC	*Tradescantia occidentalis*	0–19	–
	meadow deathcamas	ZIVE	*Zigadenus venenosus*	0–19	–
	Carolina larkspur	DECAV2	*Delphinium carolinianum ssp. virescens*	0–19	–
	annual buckwheat	ERAN4	*Eriogonum annuum*	0–19	–
	shaggy dwarf morning-glory	EVNU	*Evolvulus nuttallianus*	0–19	–
	stiff sunflower	HEPAP2	*Helianthus pauciflorus ssp. pauciflorus*	0–19	–
	hairy false goldenaster	HEVI4	*Heterotheca villosa*	0–19	–
	bush morning-glory	IPLE	*Ipomoea leptophylla*	0–19	–
	whitest evening primrose	OEAL	*Oenothera albicaulis*	0–19	–
	common starlily	LEMO4	*Leucocrinum montanum*	0–19	–
	snowball sand verbena	ABFR2	*Abronia fragrans*	0–19	–
	Cuman ragweed	AMPS	*Ambrosia psilostachya*	0–19	–
	white sagebrush	ARLU	*Artemisia ludoviciana*	0–19	–
	painted milkvetch	ASCEF	*Astragalus ceramicus var. filifolius*	0–19	–
	nineanther prairie clover	DAEN	*Dalea enneandra*	0–19	–

Shrub/Vine					
3				130–278	
	western sandcherry	PRPUB	*Prunus pumila var. besseyi*	56–185	–
	leadplant	AMCA6	*Amorpha canescens*	37–130	–
	sand sagebrush	ARFI2	*Artemisia filifolia*	19–93	–
	Shrub (>.5m)	2SHRUB	*Shrub (>.5m)*	19–93	–
	spinystar	ESVIV	*Escobaria vivipara var. vivipara*	0–19	–
	plains pricklypear	OPPO	*Opuntia polyacantha*	0–19	–
	skunkbush sumac	RHTR	*Rhus trilobata*	0–19	–
	prairie rose	ROAR3	*Rosa arkansana*	0–19	–
	soapweed yucca	YUGL	*Yucca glauca*	0–19	–
Tree					
4	**Tree**			0–37	
	plains cottonwood	PODEM	*Populus deltoides ssp. monilifera*	0–37	–

Animal community

WILDLIFE INTERPRETATIONS:

The combination of grasses, forbs, and shrubs found on the ecological site provide habitat for numerous wildlife species. Historic large grazers that influenced these communities were bison, elk, mule deer, and pronghorn. Bison are no longer widely distributed in their historic range. White-tailed deer are the most abundant ungulates using this ecological site, with some use by mule deer and pronghorn. Domestic grazers share these habitats with wildlife. The grassland communities of eastern Colorado are home to many bird species. Changes in the composition of the plant community when moving from the Reference Community to other communities on this ecological site may result in species shifts in bird species.

Reference Plant Community: Sand Bluestem, Prairie Sandreed, Switchgrass

The structural diversity in the plant community found on the Reference Site is attractive to a number of wildlife species. Common bird species expected on in this plant community include grasshopper sparrow, bobwhite quail, and red-tailed hawk. The combination of mid-tall grasses and shrubs provides habitat for lesser prairie chicken in the southeastern parts of this site. Greater prairie chicken use this site in the northern portion of the MLRA. Scaled quail may also use this community in the southern half of the MLRA. White-tailed deer, mule deer, coyote, and several species of mice are mammals that commonly use this plant community. Reptiles using this community include prairie rattlesnake, bullsnake, western hognose snake, racer, ornate box turtle, and six-lined racerunner.

1.2 Community: Increased Blue Grama, Increased Sand Sagebrush, Decreased Sand Bluestem, Decreased Prairie Sandreed

All Reference Plant Community species are expected to be found in this community. However, the reduction of tall, warm-season grasses may eventually result in decreased nesting habitat for lesser and greater prairie chicken, respectively.

1.3 Community: Excessive Litter, Excessive Standing Dead Canopy, Increased Decadence

The same species found in the Reference Plant Community are expected to be found in the Low Plant Density Community.

2.1 Community: Sand Sagebrush, Sand Dropseed, Annual Forbs and Grasses

Due to the loss of species diversity, wildlife use of this community is greatly reduced. Scaled quail may occasionally use these sites when adequate cover is available. Other birds, and occasionally mule deer may also pass through.

Prairie rattlesnake and other reptiles still found. Red-tailed hawk continue to use this site as it is easy to spot prey.

3.1 Community: Annual Forbs and Grasses, Increased Bare Ground

Wildlife use is very limited. Plant diversity and productivity is greatly reduced or absent.
3.2 Community: Sandhills Muhly, Blowout Grass, Lemon Scurfpea

The wildlife found here will be similar to the 3.1 Community.

GRAZING INTERPRETATIONS:

The following table lists suggested initial stocking rates for an animal unit (1000-pound beef cow) under continuous grazing (yearlong grazing or growing-season-long grazing) based on normal growing conditions. However, continuous grazing is not recommended. These estimates should only be used as preliminary guidelines in the initial stages of the conservation planning process. Often, the existing plant composition does not entirely match any particular plant community described in this ecological site description. Therefore, field inventories are always recommended to document plant composition, total production, and palatable forage production. Carrying capacity estimates that reflect on-site conditions should be calculated using field inventories.

If the following production estimates are used, they should be adjusted based on animal kind or class and on the specific palatability of the forage plants in the various plant community descriptions. Under a properly stocked, properly applied, prescribed grazing management system that provides adequate recovery periods following each grazing event, improved harvest efficiencies eventually result in increased carrying capacity. See USDA-NRCS Colorado Prescribed Grazing Standard and Specification Guide (528).

The stocking rate calculations are based on the total annual forage production in a normal year multiplied by 25 percent harvest efficiency divided by 912.5 pounds of ingested air-dry vegetation for an animal unit per month (AUM).

Reference PC - (1850) (0.51)

1.2 PC - (950) (0.26)

2.1 PC - (500) (.14)

Grazing by domestic livestock is one of the major income-producing industries in the area. Rangelands in this area provide yearlong forage under prescribed grazing for cattle, sheep, horses and other herbivores.

An on-site inventory should be completed prior to developing grazing recommendations.

Hydrological functions

Water is the principal factor limiting forage production on this site. This site is dominated by soils in hydrologic group A. Infiltration is high and runoff potential for this site varies from moderate to low depending on ground cover. Areas where ground cover is less than 50 percent have the greatest potential to have reduced infiltration and higher runoff (refer to NRCS Section 4, National Engineering Handbook (USDA–NRCS, 1972–2012) for runoff quantities and hydrologic curves).

Recreational uses

This site provides hunting, hiking, photography, bird watching, and other opportunities. The wide varieties of plants that bloom from spring until fall have an aesthetic value that appeals to visitors.

Wood products

No appreciable wood products are present on the site.

Other products

Site Development and Testing Plan

General Data (MLRA and Revision Notes, Hierarchical Classification, Ecological Site Concept, Physiographic, Climate, and Water Features, and Soils Data):

Updated. All “Required” items complete to Provisional level.

Community Phase Data (Ecological Dynamics, STM, Transition & Recovery Pathways, Reference Plant Community, Species Composition List, Annual Production Table):

Updated. All “Required” items complete to Provisional level.
NOTE: Annual Production Table is from the “Previously Approved” ESD 2004. The Species Composition List is also from the 2004 version, with minor edits. These will need review for future updates at Approved level.

Each Alternative State/Community:

Complete to Provisional level

Supporting Information (Site Interpretations, Assoc. & Similar Sites, Inventory Data References, Agency/State Correlation, References):

Updated. All “Required” items complete to Provisional level.

Livestock Interpretations updated to reflect Total Annual Production revisions in each plant community.

Wildlife interpretations, general narrative, and individual plant communities updated to the Provisional level. Hydrology, Recreational Uses, Wood Products, Other Products, Plant Preferences table, and Rangeland Health Reference Sheet carried over from previously “Approved” ESD 2004.

Reference Sheet

The Reference Sheet was previously approved in 2007.
It will be updated at the next “Approved” level.

“Future work, as described in a project plan, to validate the information in this provisional ecological site description is needed. This will include field activities to collect low and medium intensity sampling, soil correlations, and analysis of that data. Annual field reviews should be done by soil scientists and vegetation specialists. A final field review, peer review, quality control, and quality assurance reviews of the ESD will be needed to produce the final document.” (NI 430_306 ESI and ESD, April, 2015).

Other information

Relationship to Other Hierarchical Classifications:

NRCS Classification Hierarchy:
Physiographic Divisions of the United States (Fenneman, 1946): Physiographic DivisionPhysiographic ProvincePhysiographic SectionLand Resource RegionMajor Land Resource Area (MLRA)Land Resource Unit (LRU).
USFS Classification Hierarchy:
National Hierarchical Framework of Ecological Units (Cleland et al, 181-200):
DomainDivisionProvinceSectionSubsectionLandtype AssociationLandtypeLandtype Phase.

Inventory data references

NRI: references to Natural Resource Inventory data

Information presented here has been derived from data collection on private and federal lands using:
• Double Sampling (clipped 2 of 5 plots)*
• Rangeland Health (Pellant et al., 2005)
• Soil Stability (Pellant et al., 2005)
• Line Point Intercept : Foliar canopy, basal cover (Forb, Graminoid, Shrub, subshrub, Lichen, Moss, Rock fragments, bare ground, percent Litter) (Herrick et al., 2005)
• Soil pedon descriptions collected on site (Schoeneberger et al., 2012)

*NRCS double-sampling method, CO NRCS Similarity Index Worksheet 528(1).
Additional reconnaissance data collection using numerous ocular estimates and other inventory data; NRCS clipping data for USDA program support; Field observations from experienced range trained personnel. Specific data information is contained in individual landowner/user case files and other files located in county NRCS field offices.

References

Guyette, R.P., M.C. Stambaugh, D.C. Dey, and R. Muzika. 2012. Predicting Fire Frequency with Chemistry and Climate. Ecosystems 15:322–335.

Stewart, O.C., H.T. Lewis, and M.K. Anderson. 2002. Forgotten Fires: Native Americans and the Transient Wilderness. University of Oklahoma Press, Norman, OK. 351p.

Other references

Data collection for this ecological site was done in conjunction with the progressive soil surveys within the 67B Central High Plains (Southern Part) of Colorado. It has been mapped and correlated with soils in the following soil surveys: Adams County, Arapahoe County, Baca County, Bent County, Boulder County, Cheyenne County, El Paso County Area, Elbert County, Eastern Part, Kiowa County, Kit Carson County, Larimer County Area, Las Animas County Area, Lincoln County, Logan County, Morgan County, Prowers County, Washington County, Weld County, Northern Part, and Weld County, Southern Part.

30 Year Climatic and Hydrologic Normals (1981-2010) Reports. National Water and climate Center: Portland, OR. August 2015

ACIS-USDA Field Office Climate Data (WETS), period of record 1971-2000 http://agacis.rcc-acis.org (powered by WRCC) Accessed March 2016

Andrews, R. and R. Righter. 1992. Colorado Birds. Denver Museum of Natural History, Denver, CO. 442

Armstrong, D.M. 1972. Distribution of mammals in Colorado. Univ. Kansas Museum Natural History Monograph #3. 415.

Butler, LD., J.B. Cropper, R.H. Johnson, A.J. Norman, G.L. Peacock, P.L. Shaver, and K.E. Spaeth. 1997, revised 2003. National Range and Pasture Handbook. National Cartography and Geospatial Center's Technical Publishing Team: Fort Worth, TX. http://www.glti.nrcs.usda.gov/technical/publications/nrph.html Accessed August 2015

Clark, J., E. Grimm, J. Donovan, S. Fritz, D. Engrstom, and J. Almendinger. 2002. Drought cycles and landscape responses to past Aridity on prairies of the Northern Great Plains, USA. Ecology, 83(3), 595-601.

Cleland, D., P. Avers, W.H. McNab, M. Jensen, R. Bailey, T. King, and W. Russell. 1997. National Hierarchical Framework of Ecological Units, published in Ecosystem Management: Applications for Sustainable Forest and Wildlife Resources, Yale University Press

Cooperative climatological data summaries. NOAA. Western Regional Climate Center: Reno, NV. Web. http://www.wrcc.dri.edu/climatedata/climsum Accessed August 2015

Egan, Timothy. 2006. The Worst Hard Time. Houghton Mifflin Harcourt Publishing Company: New York, NY.

Fitzgerald, J.P., C.A. Meaney, and D.M. Armstrong. 1994. Mammals of Colorado. Denver Museum of Natural History, Denver, CO. 467. Hammerson, G.A. 1986. Amphibians and reptiles in Colorado. CO Div. Wild. Publication Code DOW-M-I-3-86. 131.

Herrick, Jeffrey E., J.W. Van Zee, K.M. Haystad, L.M. Burkett, and W.G. Witford. 2005. Monitoring Manual for Grassland, Shrubland, and Savanna Ecosystems, Volume II. U.S. Dept. of Agriculture, Agricultural Research Service. Jornada Experimental Range, Las Cruces, N.M.

Kingery, H., Ed. (1998) Colorado Breeding Birds Atlas. Dist. CO Wildlife Heritage Foundation: Denver, CO. 636.

National Water & Climate Center. USDA-NRCS. USDA Pacific Northwest Climate Hub: Portland, OR. http://www.wcc.nrcs.usda.gov/ Accessed March 2016

National Weather Service Co-op Program. 2010. Colorado Climate Center. Colorado State Univ. Web. http://climate.atmos.colostate.edu/dataaccess.php March 2016

Pellant, M., P. Shaver, D.A. Pyke, J.E. Herrick. (2005) Interpreting Indicators of Rangeland Health, Version 4. BLM National Business Center Printed Materials Distribution Service: Denver, CO.

PLANTS Database. 2015. USDA-NRCS. Web. http://plants.usda.gov/java/ Accessed August 2015. February 2016

PRISM Climate Data. 2015. Prism Climate Group. Oregon State Univ. Corvallis, OR. http://www.prism.oregonstate.edu/ Accessed August 2015.

Rennicke, J. 1990. Colorado Wildlife. Falcon Press, Helena and Billings, MT and CO Div. Wildlife, Denver CO. 138.

Schoeneberger, P.J., D.A. Wysockie, E.C. Benham, and Soil Survey Staff. 2012. Field book for describing and sampling soils, Version 3.0. Natural Resources Conservation Service, National Soil Survey Center: Lincoln, NE.

The Denver Posse of Westerners. 1999. The Cherokee Trail: Bent's Old Fort to Fort Bridger. The Denver Posse of Westerners, Inc. Johnson Printing: Boulder, CO

U.S. Dept. of Agriculture, Agricultural Research Service. September 1991. Changes in Vegetation and Land Use I eastern Colorado, A Photographic study, 1904-1986.

U.S. Dept. of Agriculture, Natural Resources Conservation Service. 2006. Land Resource Regions and Major Land Resource areas of the United States, the Caribbean, and the Pacific Basin. US Department of Agriculture Handbook 296.

U.S. Dept. of Agriculture, Natural Resources Conservation Service. National Geospatial Center of Excellence. Colorado annual Precipitation Map from 1981-2010, Annual Average Precipitation by State

U.S. Dept. of Agriculture, Natural Resources Conservation Service. 2009. Part 630, Hydrology, National Engineering Handbook

U.S. Dept. of Agriculture, Natural Resources Conservation Service. 1972-2012. National Engineering Handbook Hydrology Chapters. http://www.nrcs.usda.gov/wps/portal/nrcs/detailfull/national/water/?&cid=stelprdb1043063 Accessed August 2015.

U.S. Dept. of Agriculture, Natural Resources Conservation Service. National Soil Survey Handbook title 430-VI. http://www.nrcs.usda.gov/wps/portal/nrcs/detail/soils/ref/?cid=nrcs142p2_054242 Accessed July 2015

U.S. Dept. of Agriculture, Soil Survey Division Staff. 1993. Soil Survey Manual.

U.S. Dept. of Agriculture.1973. Soil Survey of Baca County, Colorado.

U.S. Dept. of Agriculture. 1970. Soil Survey of Bent County, Colorado.

U.S. Dept. of Agriculture. 1968. Soil Survey of Crowley County, Colorado.

U.S. Dept. of Agriculture. 1981 Soil Survey of El Paso County Area, Colorado.

U.S. Dept. of Agriculture. 1995. Soil Survey of Fremont County Area, Colorado.

U.S. Dept. of Agriculture. 1983. Soil Survey of Huerfano County Area, Colorado.

U.S. Dept. of Agriculture.1981. Soil Survey of Kiowa County, Colorado.

Western Regional Climate Center. 2022. Climate of Colorado, climate of the eastern plains. https://wrcc.dri.edu/Climate/narrative_co.php (accessed 9 August 2022).

Additional Literature:

Clark, J., E. Grimm, J. Donovan, S. Fritz, D. Engrstom, and J. Almendinger. 2002. Drought cycles and landscape responses to past Aridity on prairies of the Northern Great Plains, USA. Ecology, 83(3), 595-601.

Collins, S. and S. Barber. (1985). Effects of disturbance on diversity in mixed-grass prairie. Vegetation, 64, 87-94.

Egan, Timothy. 2006. The Worst Hard Time. Houghton Mifflin Harcourt Publishing Company: New York, NY.

Hart, R. and J. Hart. 1997. Rangelands of the Great Plains before European Settlement. Rangelands, 19(1), 4-11.

Hart, R. 2001. Plant biodiversity on shortgrass steppe after 55 years of zero, light, moderate, or heavy cattle grazing. Plant Ecology, 155, 111-118.

Heitschmidt, Rodney K., J.W. Stuth, (edited by). 1991. Grazing Management, an Ecological Perspective. Timberland Press, Portland, OR.

Jackson, D. 1966. The Journals of Zebulon Montgomery Pike with letters & related documents. Univ. of Oklahoma Press, First edition: Norman, OK.

Mack, Richard N., and J.N. Thompson. 1982. Evolution in Steppe with Few Large, Hooved Mammals. The American Naturalist. 119, No. 6, 757-773.

Reyes-Fox, M., Stelzer H., Trlica M.J., McMaster, G.S., Andales, A.A., LeCain, D.R., and Morgan J.A. 2014. Elevated CO2 further lengthens growing season under warming conditions. Nature, April 23 2014.Available online. http://www.nature.com/nature/journal/v510/n7504/full/nature13207.html, accessed March 2017.

Stahl, David W., E.R. Cook, M.K. Cleaveland, M.D. Therrell, D.M. Meko, H.D. Grissino-Mayer, E. Watson, and B.H. Luckman. Tree-ring data document 16th century megadrought over North America. 2000. Eos, 81(12), 121-125.

The Denver Posse of Westerners. 1999. The Cherokee Trail: Bent's Old Fort to Fort Bridger. The Denver Posse of Westerners, Inc. Johnson Printing: Boulder, CO.

U.S. Dept. of Agriculture. 2004. Vascular plant species of the Comanche National Grasslands in southeastern Colorado. US Forest Service. Rocky Mountain Research Station. Fort Collins, CO.

Zelikova, Tamara Jane, D.M. Blumenthal, D.G. Williams, L. Souza, D.R. LeCain, J.Morgan. 2014. Long-term Exposure to Elevated CO2 Enhances Plant Community Stability by Suppressing Dominant Plant Species in a Mixed-Grass Prairie. Ecology, 2014 issue. Available online. www.pnas.org/cgi/doi/10.1073/pnas.1414659111.

Contributors

Kimberly Diller, Ecological Site Specialist, NRCS MLRA, Pueblo SSO

Andy Steinert, MLRA 67B Soil Survey Leader, NRCS MLRA Fort Morgan SSO
Ben Berlinger, Rangeland Management Specialist, Retired NRCS La Junta, CO
Doug Whisenhunt, Ecological Site Specialist, NRCS MLRA, Pueblo SSO

Approval

Kirt Walstad, 9/08/2023

Acknowledgments

Program Support:
Rachel Murph, NRCS State Rangeland Management Specialist-QC, Denver, CO
David Kraft, NRCS MLRA Ecological Site Specialist-QA, Emporia, KS
Josh Saunders, Rangeland Management Specialist-QC, NRCS Fort Morgan, CO
Patty Knupp, Biologist, Area 3, NRCS Pueblo, CO
Noe Marymor, Biologist, Area 2, NRCS Greeley, CO
Richard Mullaney, Resource Conservationist, Retired., NRCS, Akron, CO
Chad Remley, Regional Director, N. Great Plains Soil Survey, Salina, KS
B.J. Shoup, State Soil Scientist, Denver
Eugene Backhaus, State Resource Conservationist, Denver
Carla Green Adams, Editor, NRCS, Denver, CO

Partners/Contributors:
Rob Alexander, Agricultural Resources, Boulder Parks & Open Space, Boulder, CO
David Augustine, Research Ecologist, Agricultural Research Service, Fort Collins, CO
John Fusaro, Rangeland Management Specialist, NRCS, Fort Collins, CO
Jeff Goats, Resource Soil Scientist, NRCS, Pueblo, CO
Clark Harshbarger, Resource Soil Scientist, NRCS, Greeley, CO
Mike Moore, Soil Scientist, NRCS MLRA Fort Morgan SSO
Tom Nadgwick, Rangeland Management Specialist, NRCS, Akron CO
Dan Nosal, Rangeland Management Specialist, NRCS, Franktown, CO
Steve Olson, Botanist, USFS, Pueblo, CO
Randy Reichert, Rangeland Specialist, retired, USFS, Nunn, CO
Don Schoderbeck, Range Specialist, CSU Extension, Sterling CO
Terri Schultz, The Nature Conservancy, Ft. Collins, CO
Chris Tecklenburg, Ecological Site Specialist, Hutchison, KS

Rangeland health reference sheet

Interpreting Indicators of Rangeland Health is a qualitative assessment protocol used to determine ecosystem condition based on benchmark characteristics described in the Reference Sheet. A suite of 17 (or more) indicators are typically considered in an assessment. The ecological site(s) representative of an assessment location must be known prior to applying the protocol and must be verified based on soils and climate. Current plant community cannot be used to identify the ecological site.

Author(s)/participant(s)	Harvey Sprock, Daniel Nosal
Contact for lead author	Harvey Sprock, Area Rangeland Management Specialist, Greeley, CO
Date	01/11/2005
Approved by	Kirt Walstad
Approval date	
Composition (Indicators 10 and 12) based on	Annual Production

Indicators

1. **Number and extent of rills:** None

---

2. **Presence of water flow patterns:** Typically none. Water patterns, if present, are broken, irregular in appearance or discontinuous with numerous debris dams or vegetative barriers.

---

3. **Number and height of erosional pedestals or terracettes:** Pedestalled plants caused by wind erosion would be minor.

---

4. **Bare ground from Ecological Site Description or other studies (rock, litter, lichen, moss, plant canopy are not bare ground):** 3 percent or less bare ground, with bare patches ranging from 3 to 5 inches in diameter. Prolonged drought or wildfire events will cause bare ground to increase upwards to 5 to10 percent with bare patches ranging from 8 to 2 inches in diameter.

---

5. **Number of gullies and erosion associated with gullies:** None

---

6. **Extent of wind scoured, blowouts and/or depositional areas:** Very minor wind scouring may occur. Wind erosion can occur with disturbances such as fire or extended drought.

---

7. **Amount of litter movement (describe size and distance expected to travel):** Litter should be uniformly distributed with little movement. On steep slopes or knolls, litter may move from a few inches to 1 to 2 feet depending on intensity of wind or rainfall event.

---

8. **Soil surface (top few mm) resistance to erosion (stability values are averages - most sites will show a range of values):** Stability class rating is anticipated to be 4 to 5 in the interspaces at soil surface. Soil surface is stabilized by decomposing organic matter. Biological crusts (lichens, algae, cyanobacteria, mosses) may be present on or just below soil surface.

---

9. **Soil surface structure and SOM content (include type of structure and A-horizon color and thickness):** Average SOM ranges from 1to 2 percent. Soils are very deep, light brownish gray, weak very fine granular structure.

---

10. **Effect of community phase composition (relative proportion of different functional groups) and spatial distribution on infiltration and runoff:** Raindrop impact is reduced by the diverse grass, forb, shrub functional/structural groups and root structure. This slows overland flow and provides increased time for infiltration to occur. Extended drought, wildfire or both may reduce basal density, canopy cover, and litter amounts (primarily from tall, warm-season bunch and rhizomatous grasses), resulting in decreased infiltration and increased runoff on steep slopes following intense rainfall events.

---

11. **Presence and thickness of compaction layer (usually none; describe soil profile features which may be mistaken for compaction on this site):** None

12. **Functional/Structural Groups (list in order of descending dominance by above-ground annual-production or live foliar cover using symbols: >>, >, = to indicate much greater than, greater than, and equal to):**

    Dominant: Warm-season tall bunchgrass >>

    Sub-dominant: Warm-season tall rhizomatous grass > shrubs > cool-season mid bunchgrass > warm-season mid bunchgrass > leguminous forbs >

    Other: Warm-season short bunchgrass = warm-season forbs > cool-season forbs

    Additional:

13. **Amount of plant mortality and decadence (include which functional groups are expected to show mortality or decadence):** Minimal

14. **Average percent litter cover (%) and depth (in):** Litter cover during and following drought ranges from 20 to 30 percent and 5 to15 percent following wildfire.

15. **Expected annual annual-production (this is TOTAL above-ground annual-production, not just forage annual-production):** 1200 lbs./ac. low precipitation years; 1850 lbs./ac. average years; 2400 lbs./ac. high years. After extended drought or the first growing season following wildfire, production may be significantly reduced by 400 to 750 lbs./ac. or more.

16. **Potential invasive (including noxious) species (native and non-native). List species which BOTH characterize degraded states and have the potential to become a dominant or co-dominant species on the ecological site if their future establishment and growth is not actively controlled by management interventions. Species that become dominant for only one to several years (e.g., short-term response to drought or wildfire) are not invasive plants. Note that unlike other indicators, we are describing what is NOT expected in the reference state for the ecological site:** Invasive plants should not occur in reference plant community. Following fire events or extended drought, cheatgrass, Russian thistle, burningbush, Rocky Mountain beeplant may invade assuming a seed source is available.

17. **Perennial plant reproductive capability:** The only limitations are weather-related, wildfire, natural disease, and insects that may temporarily reduce reproductive capability.