Ecological site group DX035X01IESG13
Little Colorado River Basin-Shale or clayey (receive run in moisture)

Last updated: 10/25/2022
Accessed: 05/02/2024

Key Characteristics

- Little Colorado River Basin
- Shale or Clayey
- Receive extra water from run-in moisture

Provisional. A provisional ecological site description has undergone quality control and quality assurance review. It contains a working state and transition model and enough information to identify the ecological site.

Physiography

Site occurs in a bottom position on floodplains, valley floors, stream terraces and drainageways and benefits significantly from run-in moisture from adjacent areas.

Climate

50-60% of moisture falls as rain Jul-Sep and is the most effective moisture for plant growth. The remaining moisture comes as snow during the winter.

Mean temperature for the hottest month (Jul) is 72 F; for the coldest month (Jan) is 32 F. Extreme temperatures of 105 F and -28F have been recorded. Long periods with little or no effective moisture are relatively common.

Cool season plants begin growth in early spring and mature early summer. Warm season plants take advantage of summer rains and are growing and nutritious from Jul-Sep.

Soil features

Soils grouped together in this site are deep to plant root restricting layers. The surface horizons typically have textures of clay loam to clay about 2 - 6 inches thick. The subsurface horizons have textures of clay loam to clay and contain very little gravel. Some soils may have stratified layers of coarser textures in the subsurface. The soil normally can absorb and hold most of the moisture the climate supplies. Soluble salts are low. Soil reaction ranges from mildly to moderately alkaline (pH 7.4 to 8.4).

Vegetation dynamics

The reference state was described by the observation and study of plant communties that have evolved through a long-term interactions of natural disturbances processes, climate, soils and landforms. This reference state is characterized as a native mid and short grassland dominated by alkali sacaton and western wheatgrass.

Major Land Resource Area

MLRA 035X
Colorado Plateau

Subclasses

- DX035X01I104–Clay Loam Wash 10-14" p.z.

- R035XB202AZ–Clayey Wash 6-10" p.z.

Correlated Map Unit Components

22341124, 22341141, 22341142, 22341167, 22341168, 22353856, 22353946, 22354007, 22353398, 22353399, 22353395, 22353400, 22353401, 22353402, 22353435, 22353450, 22353443, 22353451, 22353453

Stage

Provisional

Contributors

Curtis Talbot

State and transition model

Ecosystem states

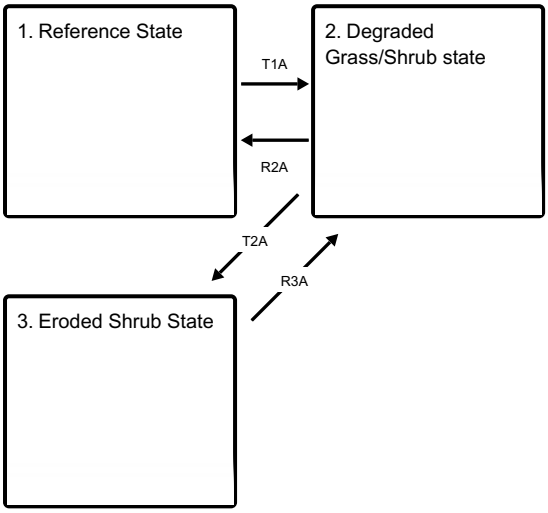

State 1 submodel, plant communities

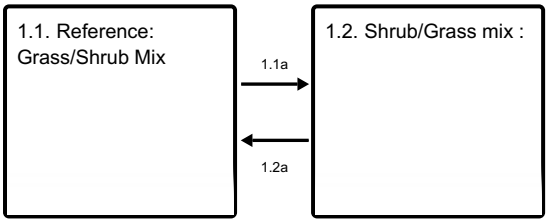

State 2 submodel, plant communities

State 3 submodel, plant communities

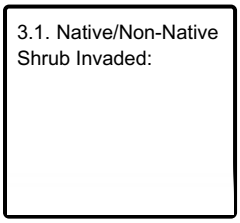

State 1
Reference State

The reference state was described by the observation and study of plant communties that have evolved through a long-term interactions of natural disturbances processes, climate, soils and landforms. This reference state is characterized as a native mid and short grassland dominated by alkali sacaton and western wheatgrass.

Community 1.1
Reference: Grass/Shrub Mix

This plant community is about 70 to 80% grasses, 5 to 10% forbs, and 10 to 20% shrubs based on air dry weight. Alkali sacaton dominates the plant community, making up to 40% of the total annual production of the site. Western wheatgrass is the subdominant. blue grama, galleta grass, vine mesquite, sideoats grama grass, fourwing saltbush and winterfat are important indigenous components.

Management interpretations

Brush management **Critical values**	**Interpretations**

Brush management **Critical values**	**Interpretations**

Community 1.2
Shrub/Grass mix :

The aspect of this plant community is a shrubland. The plant community is dominated by fourwing saltbush with galleta, western wheatgrass and lesser amounts of alkali sacaton. Unmanaged grazing, run-in moisture/rare flooding, lack of fire and drought can maintain the shrub component.

Pathway 1.1a
Community 1.1 to 1.2

Shrub species gain a competitive advantage over time as extensive root systems can reach for deep resources.

Pathway 1.2a
Community 1.2 to 1.1

A disturbance such as fire will set the shrubs back allowing for greater composition of grasses.

State 2
Degraded Grass/Shrub state

This state is characterized by a dominance of warm season grasses and half shrubs with moderate amounts of native and non-native annuals. Common species in this state include galleta, blue grama, alkali sacaton, rabbitbrush and snakeweed.

Community 2.1
Warm season grass/shrub/introduced species

This plant community is characterized by a dominance of warm season short and mid grasses with an increase of shrubs like rabbitbrush and snakeweed along with native and non-native annual forbs. Non-native annuals have become well established and can make up to 20% of the plant community by weight. Favorable species, such as western wheatgrass and fourwing saltbush may only be present in minor amounts. Occasional invasive shrubs/trees may occupy the site along drainages and channels in small isolated clumps. Disturbances such as overgrazing,

severe drought, past farming activities or other activities have altered the drainages and results in a reduction of beneficial run-in moisture. Grass cover is reduced along with increased bare ground which allows annuals to increase.

Community 2.2
Shrub/Warm Season Grass/introduced species

This plant community is characterized by a dominance of shrubs like rabbitbrush and snakeweed along with native and non-native annual forbs. Non-native annuals have become well established and can make up to 30% of the plant community by weight. Favorable species, such as alkali sacaton, western wheatgrass and fourwing saltbush may only be present in minor amounts. Occasional invasive shrubs/trees may occupy the site along drainages and channels in small stands or clumps. Disturbances such as overgrazing, severe drought, past farming activities or other activities have alter the drainages and results in a reduction of beneficial run-in moisture. Perennial grass cover is reduced along with increased bare ground which allows annuals to increase and co-dominate.

Pathway 2.1a
Community 2.1 to 2.2

Over time with herbivory targeted toward grasses, shrubs gain a competitive advantage.

Pathway 2.2a
Community 2.2 to 2.1

A disturbance such as fire sets the shrubs back coupled with improved management to allow grasses a chance to colonize.

State 3
Eroded Shrub State

This state is characterized by the invasion of native and non-native shrubs and active erosion. The site has lost the ability to capture and store moisture due to entrenched channels and gullies.

Community 3.1
Native/Non-Native Shrub Invaded:

This site is characterized by a dominance of shrubs, such as rabbitbrush, snakeweed and fourwing saltbush with occasional invasive species. Invasive shrubs/trees, such as tamarisk (salt cedar), camelthorn, Russian knapweed and/or Russian olive can occupy the site along drainages and entrenched channels in small stands. This plant community no longer benefits from extra run-in moisture and/or flooding. Active channel down cutting has drained the site and perennial grass cover is significantly reduced. Native and non-native forbs can make up to 30% of the plant community by weight.

Transition T1A
State 1 to 2

If retrogression is from repetitive high utilization of palatable species, alkali sacaton, western wheat, vinemesquite, and sideoats grama will decrease. Three awn, tumble grass, ring muhly, burrograss and inferior forbs and shrubs can increase. Plant species most likely to increase on a deteriorating condition are rabbitbrush, broom snakeweed, wooly groundsel, annuals and cacti.

Restoration pathway R2A
State 2 to 1

A slow process to restore soil function and improve colonization of native species.

Transition T2A

State 2 to 3

Shrubs have taken over the site, uderstory grasses are minimal. Tamarisk has greatly increased. Excessive erosion is occurring.

Restoration pathway R3A
State 3 to 2

Biological, chemical, or mechanical brush control along with management to encourage the colonization of grass species and the building of soil health.

Citations